MUNICIPAL DISTRICT OF GREENVIEW NO. 16

REGULAR COUNCIL MEETING AGENDA

June 22, 2020 | 9:00 AM | Administration Building, Valleyview, AB

#1	CALL TO ORDER		
#2	ADOPTION OF AGENDA		
#3	MINUTES	3.1 Regular Council Meeting minutes held June 8, 2020.	3
		3.2 Business Arising from the Minutes	
#4	PUBLIC HEARING		
#5	DELEGATION		
#6	BYLAWS	6.1 Bylaw 20-848 Partial Road Allowance Closure Request – West of NW-9-69-21-W5	10
#7	BUSINESS	7.1 Partial Road Allowance Closure Request – West of NW-9-69-21 W5	17
		7.2 Purchase of 2020 Plow/Sand/Gravel Trucks	21
		7.3 Electric Vehicle Charging Infrastructure	50
		7.4 Operation of Shuttler Flats Provincial Recreation Area	55
		7.5 2020 Scholarships	65
		7.6 Tax Recovery – Public Land Sale	73
		7.7 Clay Shoot 2020	97

		7.8 Policy 6320 Greenview Rental Equipment	103
		7.9 Canada Day Fireworks – Funding Request	109
#8	NOTICE OF MOTION	8.1 Grande Cache Institute Pedestrian Path	112
#9	CLOSED SESSION		
#10	MEMBERS REPORTS/EXPENSE CLAIMS	• Ward 2 • Ward 4 • Ward 6 • Ward 7 • Division 9	123
#11	ADJOURNMENT		

Minutes of a
REGULAR COUNCIL MEETING
MUNICIPAL DISTRICT OF GREENVIEW NO. 16
Greenview Administration Building,
Valleyview, Alberta on Monday June 8, 2020

#1
CALL TO ORDER

Reeve Dale Smith called the meeting to order at 9:02 a.m.

Present

Ward 5	Reeve Dale Smith
Division 9	Deputy Reeve Tyler Olsen
Ward 1	Councillor Winston Delorme(Teleconference)
Ward 2	Councillor Dale Gervais
Ward 3	Councillor Les Urness
Ward 4	Councillor Shawn Acton
Ward 6	Councillor Tom Burton
Ward 7	Councillor Roxie Rutt
Ward 8	Councillor Bill Smith(Teleconference)
Division 9	Councillor Duane Didow(Teleconference)

ATTENDING

Chief Administrative Officer	Denise Thompson
Assistant Chief Administrative Officer	Stacey Wabick
General Manager, Community Services	Gerry Murphy
General Manager, Infrastructure & Planning	Roger Autio
Chief Financial Officer	Aleks Nelson
Marketing & Communication Manager	Stacey Sevilla
Recording Secretary	Lianne Kruger

ABSENT

#2
AGENDA

MOTION: 20.06.327. Moved by: DEPUTY REEVE TYLER OLSEN
That Council adopt the June 8, 2020 Regular Council Meeting Agenda as presented.
CARRIED

#3
MINUTES

MOTION: 20.06.328. Moved by: COUNCILLOR DALE GERVAIS
That Council adopt the minutes of the Regular Council Meeting held on Monday May 25, 2020 as amended:

- Councillor Dale Gervais attendance – remove (Teleconference)
- Reeve Dale Smith Members Report – Add location of Mayor Given and Reeve Beaupre

CARRIED

#3.1
BUSINESS ARISING FROM THE MINUTES

3.1 BUSINESS ARISING FROM MINUTES

UNADOPTED

#4
PUBLIC HEARING

4.0 PUBLIC HEARING

There were no Public Hearings presented.

#6
BYLAWS

6.0 BYLAWS

6.1 BYLAW 20-853 M.D. OF GREENVIEW LIBRARY BOARD

BYLAW 20-853
THIRD READING

MOTION: 20.06.329. Moved by: COUNCILLOR ROXIE RUTT
That Council give third reading to Bylaw 20-853 "M.D. of Greenview Library Board Amendment".

CARRIED

#7
BUSINESS

7.0 BUSINESS

7.1 PURCHASE OF 2020 LIGHT DUTY VEHICLES

PURCHASE OF 2020
LIGHT DUTY
VEHICLES

MOTION: 20.06.330. Moved by: COUNCILLOR SHAWN ACTON
That Council award the 2020 Light Vehicle Tender to Windsor Ford for ten units with an upset limit of $406,990.10, with funds to come from the approved 2020 Capital Budget.

CARRIED

7.2 SPRING 2020 GRANT REQUESTS

SPRING 2020
GRANT REQUESTS

MOTION: 20.06.331. Moved by: COUNCILLOR TOM BURTON
That Council approve funding of the Spring 2020 Community Grants totalling $94,000.00, with funds to come from the Community Service Miscellaneous Grant Budget.

CARRIED

7.3 ENFORCEMENT SERVICES PROGRAM PRIORITIES

ENFORCEMENT
SERVICES
PROGRAM
PRIORITIES
PRESENTATION

MOTION: 20.06.332. Moved by: COUNCILLOR ROXIE RUTT
That Council accept the presentation for establishing the Greenview Community Peace Officer program priorities for information as presented.

CARRIED

UNADOPTED

ENFORCEMENT SERVICES PROGRAM PRIORITIES

MOTION: 20.06.333. Moved by: COUNCILLOR TOM BURTON
That Council direct the Greenview Community Peace Officer Program Administration to focus 2020 program priorities on Community Relations, Traffic Act, Infrastructure, Greenview Bylaws, Education, assisting with criminal code matters; i.e. property theft and increased presence throughout Greenview.

CARRIED

Reeve Dale Smith recessed the meeting at 10:04 a.m.
Reeve Dale Smith reconvened the meeting at 10:15 a.m.

7.4 GREENVIEW INDUSTRIAL GATEWAY GRAPHICS BRANDING

GREENVIEW INDUSTRIAL GATEWAY GRAPHICS BRANDING

MOTION: 20.06.334. Moved by: COUNCILLOR DALE GERVAIS
That Council accept the Graphics for the proposed Greenview Industrial Gateway project for information, as presented.

CARRIED

7.5 GRANDE CACHE RECREATION CENTRE – ARENA DRESSING ROOM REVITALIZATION

GRANDE CACHE RECREATION CENTRE – ARENA DRESSING ROOM REVITALIZATION

MOTION: 20.06.335. Moved by: DEPUTY REEVE TYLER OLSEN
That Council approve the final architectural drawings for the Grande Cache Recreation Centre – Arena Dressing Room Revitalization as presented for pricing and future tender.

CARRIED

7.6 GRANDE CACHE RECREATION CENTRE – CUSTODIAL CONTRACTOR

GRANDE CACHE RECREATION CENTRE – CUSTODIAL CONTRACTOR

MOTION: 20.06.336. Moved by: COUNCILLOR WINSTON DELORME
That Council authorize Administration to enter into an annual agreement with H.Y. Cleaning Services A1215-2nd Ave, Wainwright, AB T9W 1G8 for custodial services for the Grande Cache Recreation Centre as per the Request for Proposal #AB-2020-0184, for the annual sum of $119,808.00 plus GST, with funds to come from the 2020 Recreation Operating Budget.

CARRIED

7.7 NITEHAWK BUDGET REALLOCATION

NITEHAWK BUDGET REALLOCATION

MOTION: 20.06.337. Moved by: COUNCILLOR TOM BURTON
That Council authorize the reallocation of $68,250.00, a portion of the capital grant provided to Nitehawk Recreation Area during the 2020 calendar year, to be utilized for operational expenditures.

CARRIED

UNADOPTED

#5 DELEGATIONS

5.0 DELEGATIONS

5.1 2019 DRAFT FINANCIAL STATEMENT

2019 DRAFT FINANCIAL STATEMENT

MOTION: 20.06.338. Moved by: COUNCILLOR TOM BURTON
That Council approve the 2019 Draft Financial Statement as amended by Metrix Group LLP Chartered Accountants for submission to the Minister of Alberta Municipal Affairs

- Decrease the Unrestricted Surplus amount of $7,574,075. by $4,403,950. to $3,170,125.
- Increase the Restricted Surplus-Project Carry Forward amount of $38,653,854. by $4,403,950. to $43,057,804.

CARRIED

Councillor Tom Burton vacated the meeting at 12:05 p.m.

Reeve Dale Smith recessed the meeting at 12:05 p.m.
Reeve Dale Smith reconvened the meeting at 1:04 p.m.

7.8 POLICY 1018 EXPENDITURE AND DISBURSEMENT REVISION

POLICY 1018

MOTION: 20.06.339. Moved by: COUNCILLOR DALE GERVAIS
That Council approve revised policy 1018 as presented.

CARRIED

Councillor Tom Burton re-entered the meeting at 1:18 p.m.

7.9 CAO/MANAGERS' REPORTS

CAO/MANAGERS' REPORTS

MOTION: 20.06.340. Moved by: COUNCILLOR LES URNESS
That Council accept the CAO/Managers' Reports for information as presented.

CARRIED

#8 NOTICE OF MOTION

8.0 NOTICE OF MOTION

UNADOPTED

#9
CLOSED SESSION

9.0 CLOSED SESSION

CLOSED SESSION

MOTION: 20.06.341. Moved by: DEPUTY REEVE TYLER OLSEN
That the meeting go to Closed Session, at 1:53 p.m., pursuant to Section 197 of the Municipal Government Act, 2000, Chapter M-26 and amendments thereto, and Division 2 of Part 1 of the Freedom of Information and Protection of Privacy Act, Revised Statutes of Alberta 2000, Chapter F-25 and amendments thereto, to discuss Privileged Information with regards to the Closed Session.

CARRIED

9.1 LOCAL PUBLIC BODY CONFIDENCES

(FOIPP; Section 23)

OPEN SESSION

MOTION: 20.06.342. Moved by: COUNCILLOR ROXIE RUTT
That, in compliance with Section 197(2) of the Municipal Government Act, this meeting come into Open Session at 2:14 p.m.

CARRIED

MD OF GREENVIEW LIBRARY BOARD

MOTION: 20.06.343. Moved by: COUNCILLOR DALE GERVAIS
That Council direct Administration to discontinue the provision of payroll services to the MD of Greenview Library Board.

CARRIED

#10
MEMBER REPORTS
& EXPENSE CLAIMS

11.0 MEMBERS BUSINESS

WARD 1

COUNCILLOR WINSTON DELORME updated Council on his recent activities, which include;
May 25, 2020 Regular Council Meeting

WARD 2

COUNCILLOR DALE GERVAIS updated Council on his recent activities, which include;
May 25, 2020 Regular Council Meeting

WARD 3

COUNCILLOR LES URNESS updated Council on his recent activities, which include;
May 25, 2020 Regular Council Meeting
Greenview Regional Waste Management Commission Meeting

WARD 4

COUNCILLOR SHAWN ACTON submitted his update to Council on his recent activities, which include;
May 25, 2020 Regular Council Meeting

UNADOPTED

Fox Creek Synergy Group Conference Call
Greenview Regional Waste Management Commission Meeting

WARD 5

REEVE DALE SMITH submitted his update to Council on his recent activities, which include;
May 25, 2020 Regular Council Meeting
Senior's Week – Red Willow Lodge
Northern Alberta Elected Leaders Conference Call

WARD 6

COUNCILLOR TOM BURTON submitted his update to Council on his recent activities, which include;
May 25, 2020 Regular Council Meeting
Municipal Affairs Town Hall Conference Call

WARD 7

COUNCILLOR ROXIE RUTT submitted her update to Council on her recent activities, which include;
May 25, 2020 Regular Council Meeting
P.A.C.E. Board of Directors

WARD 8

COUNCILLOR BILL SMITH updated Council on his recent activities, which include;
May 25, 2020 Regular Council Meeting

DIVISION 9

COUNCILLOR DUANE DIDOW submitted his update to Council on his recent activities, which include;
May 25, 2020 Regular Council Meeting
Community Futures West Yellowhead Meeting

DIVISION 9

COUNCILLOR TYLER OLSEN submitted his update to Council on his recent activities, which include;
May 11, 2020 Committee of the Whole Meeting
Municipal Planning Commission Meeting
Community futures West Yellowhead Meeting
May 19, 2020 Committee of the Whole Meeting
River of Death & Discovery Dinosaur Museum Society Annual General Meeting
Grande Prairie Tourism Association Ad Campaign Concept Presentation
Nitehawk Year-Round Adventure Park Meeting
Nitehawk Year-Round Adventure Parke Conference Call
Community Futures West Yellowhead Meeting
Grande Prairie Tourism Association Meeting

UNADOPTED

MEMBERS BUSINESS

MOTION: 20.06.344. Moved by: DEPUTY REEVE TYLER OLSEN
That Council accept the Members Business Reports as presented.
CARRIED

#11 ADJOURNMENT

12.0 ADJOURNMENT

MOTION: 20.06.345. Moved by: COUNCILLOR ROXIE RUTT
That Council adjourn this Regular Council Meeting at 2:32 p.m.
CARRIED

_____ _____

CHIEF ADMINISTRATIVE OFFICER REEVE

UNADOPTED

REQUEST FOR DECISION

SUBJECT:	**Bylaw 20-848 Partial Road Allowance Closure Request – West of NW-9-69-21-W5**				
SUBMISSION TO:	REGULAR COUNCIL MEETING	REVIEWED AND APPROVED FOR SUBMISSION			
MEETING DATE:	June 22, 2020	CAO:	DT	MANAGER:	SAR
DEPARTMENT:	PLANNING & DEVELOPMENT	GM:		PRESENTER:	PL
STRATEGIC PLAN:	Development				

RELEVANT LEGISLATION:

Provincial (cite) – Municipal Government Act Section 22(1): 'No road in a municipality that is subject to the direction, control and management of the municipality may be closed except by bylaw.'

Municipal Government Act Section 188: 'The previous readings of a proposed bylaw are rescinded if the proposed bylaw (a) does not receive third reading within 2 years after first reading, or…'

Council Bylaw/Policy (cite) – N/A

RECOMMENDED ACTION:

MOTION: That Council give first reading to Bylaw 20-848 to close 1.05 hectares ± within Road Plan 2761 PX lying west of NW-9-69-21-W5 as shown on Schedule 'A' hereto.

MOTION: That Council schedule a Public Hearing on July 27, 2020 for Bylaw No. 20-848 to close 1.05 hectares ± of Road Plan 2761 PX lying west of NW-9-69-21-W5 as shown on Schedule 'A' hereto.

BACKGROUND/PROPOSAL:

Greenview received a road closure request from Arne and Merle Johnson on February 20, 2020, to close a portion of Road Plan 2761 PX as shown on the attached survey plan labeled Schedule 'A', being an area consisting of 1.05 hectares ± (2.59 acres). The area would subsequently be consolidated with the existing title to their agricultural quarter NW-9-69-21-W5 (Certificate of Title 112 369 890+5, cont. 62.67 hectares). The fair market value of the 1.05 hectares ± was calculated by Accurate Assessment at $2,520.00 and an Offer to Sell would be prepared for signature by Arne and Merle Johnson, the agreement also requiring reimbursement to Greenview of the survey and transfer costs.

In accordance with legislation notification of the proposed road closure was circulated to internal and external referral agencies and no negative concerns or comments were received. Administration feels that the closure does not, or will not in the future, cause undue hardship for the road network in this location with access available to the quarter from Range Road 214. Administration is recommending that Council sell the land to Arne and Merle Johnson as set out above, give First Reading to Bylaw No. 20-848 and establish a Public Hearing date of July 27, 2020 to allow the public to comment in accordance with legislative requirements.

BENEFITS OF THE RECOMMENDED ACTION:

1. The public hearing would be advertised once Council gives approval to recommendation.

DISADVANTAGES OF THE RECOMMENDED ACTION:

1. There are no perceived disadvantages to the recommended motion.

ALTERNATIVES CONSIDERED:

Alternative #1: Council has the option to deny First Reading until after the Public Hearing has been held.

FINANCIAL IMPLICATION:

Direct Costs:

Greenview would be responsible for the cost to advertise the public hearing, and all costs associated with the survey and transfer will be paid by the landowners.

STAFFING IMPLICATION:

There are no staffing implications to the recommended motion.

PUBLIC ENGAGEMENT LEVEL:

Greenview has adopted the IAP2 Framework for public consultation.

INCREASING LEVEL OF PUBLIC IMPACT

Consult

PUBLIC PARTICIPATION GOAL

Consult - To obtain public feedback on analysis, alternatives and/or decisions.

PROMISE TO THE PUBLIC

Consult - We will keep you informed, listen to and acknowledge concerns and aspirations, and provide feedback on how public input influenced the decision

FOLLOW UP ACTIONS:

Required circulation providing notification of the public hearing would be sent in accordance with legislation. Following the public hearing the proposed closure package would forwarded to Alberta Transportation for consideration, prior to returning to Council for second and third reading.

ATTACHMENT(S):

- Schedule 'A' - Tentative Plan
- Map Overview
- Bylaw 20-848

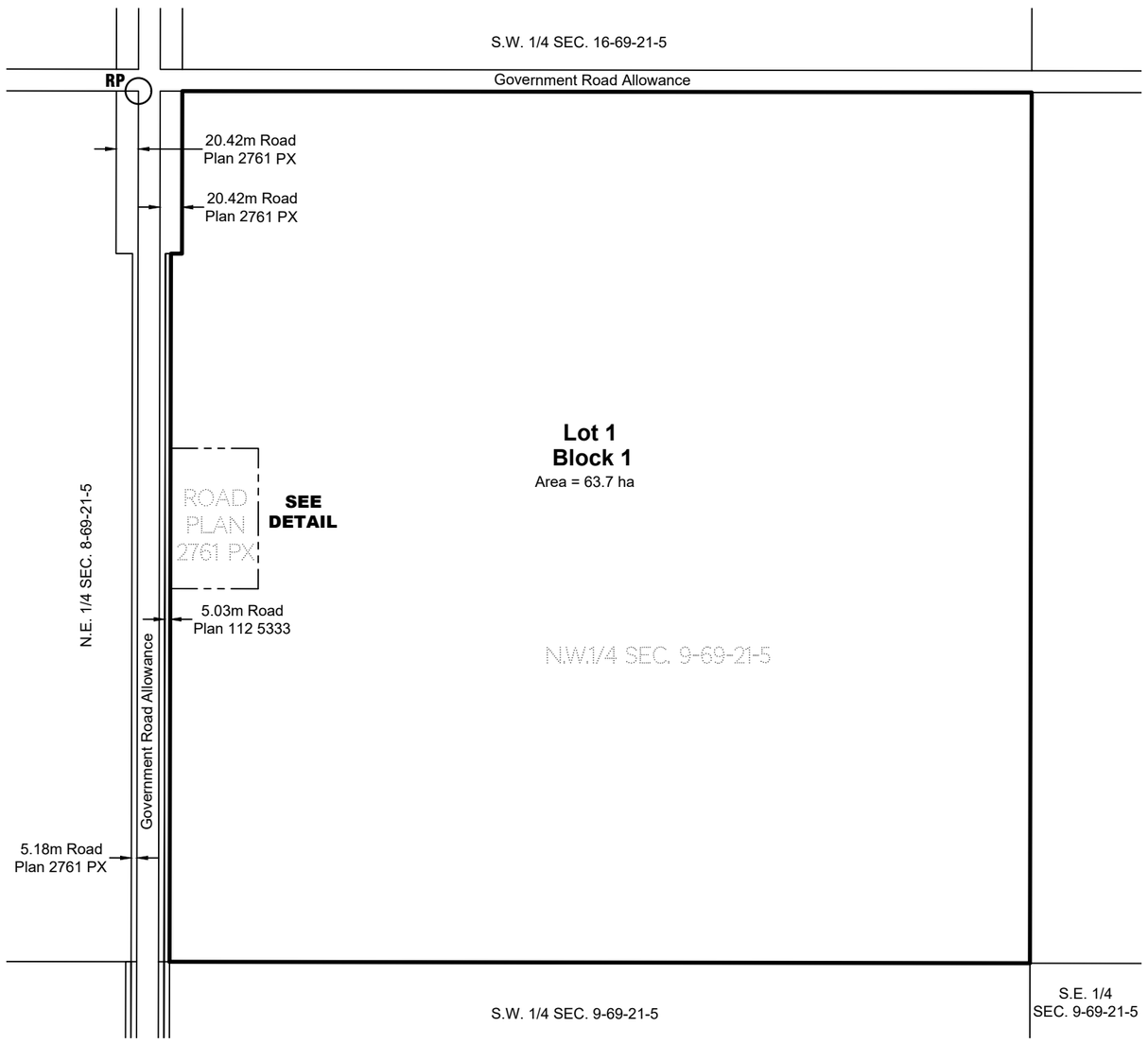

TABLE OF AREAS

LOT 1, BLOCK 1		
From N.W. 1/4 Sec. 9-69-21-5	=	62.67 ha
Closed portion of Road Plan 2761 PX	=	1.05 ha
Total	=	63.7 ha

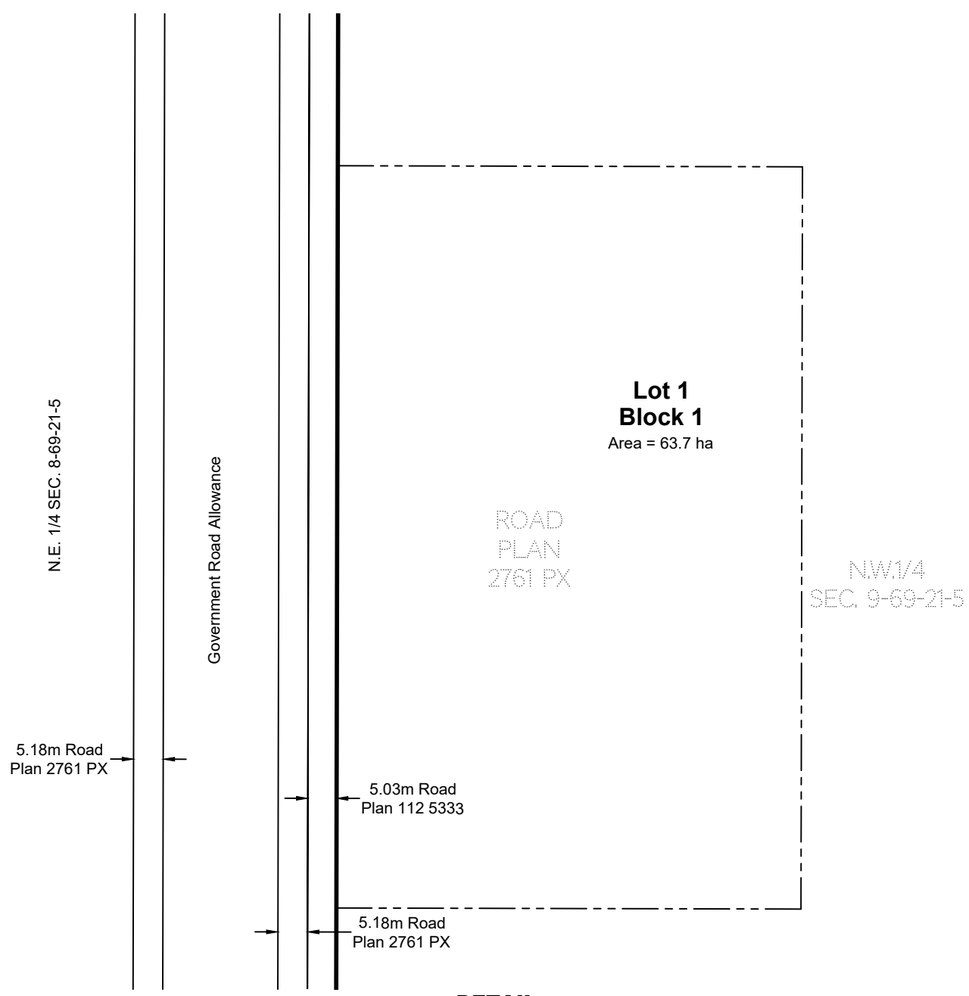

DETAIL
Scale 1 : 1000

PLAN No.

ENTERED AND REGISTERED

ON _____

INSTRUMENT No. _____

_____
A.D. REGISTRAR
LAND TITLES OFFICE

DESCRIPTIVE PLAN

SHOWING CONSOLIDATION

of

CLOSED PORTION OF ROAD PLAN 2761 PX

and the remainder of

N.W.1/4 SEC. 9 TWP. 69 RGE. 21 W.5M.

all within

N.W.1/4 SEC. 9 TWP. 69 RGE. 21 W.5M.

MUNICIPAL DISTRICT OF GREENVIEW NO. 16

ALBERTA
2019

SCALE = 1:5000
0 100 200

LEGEND:

Geo-Reference Point shown thus: RP

Parallel lines are indicated thus:

Right angles are indicated thus: 90°

Area to be registered by this plan bounded thus and contains 63.7 hectares.

Distances are in meters & decimals thereof.

No field inspection was carried out and boundaries have not been established on the ground.

Bearings are grid and are referred to Central Meridian 117° West, UTM projection, NAD 83 (Original) datum and are derived from ATS V4.1.

Combined Scale factor used = 0.999501

Geo-Reference point: UTM NAD83 (Original) derived from ATS v4.1 } 6091101.10 N. 490148.53 E.

ABBREVIATIONS:

ALS	Alberta Land Surveyor
ATS	Alberta Township System
E.	East
ha	Hectares
m	Meters
M.	Mound or Meridian
N.	North
NAD	North American Datum
Rge.	Range
RP	Geo-Reference Point
S.	South
Sec.	Section
Twp.	Township
UTM	Universal Transverse Mercator
W.	West

SURVEYOR :
A.W. Shadid, A.L.S.

DATE OF SIGNING:

September 17th, 2019

ALBERTA LAND SURVEYORS' ASSOCIATION
PERMIT NUMBER
P 281
VELOCITY GEOMATICS INC.
o/a VELOCITY GROUP

OWNERS :
ARNE SIGRED JOHNSON
MERLE ALICE JOHNSON

Initials: KO - WS	Grande Prairie Peace River Beaumont VELOCITY GROUP Surveying & Engineering Unit 104 - 11302 98th Avenue Grande Prairie, AB T8V 8H4 Ph.: 587-259-8888	CAD File: 190318_DE
Plan Date: September 17, 2019		Office File: 190318

FILE NO. R19-002 **LEGAL LOCATION: NW-09-69-21-W5**

APPLICANT: JOHNSON ARNE & MERLE **LANDOWNER: SAME**

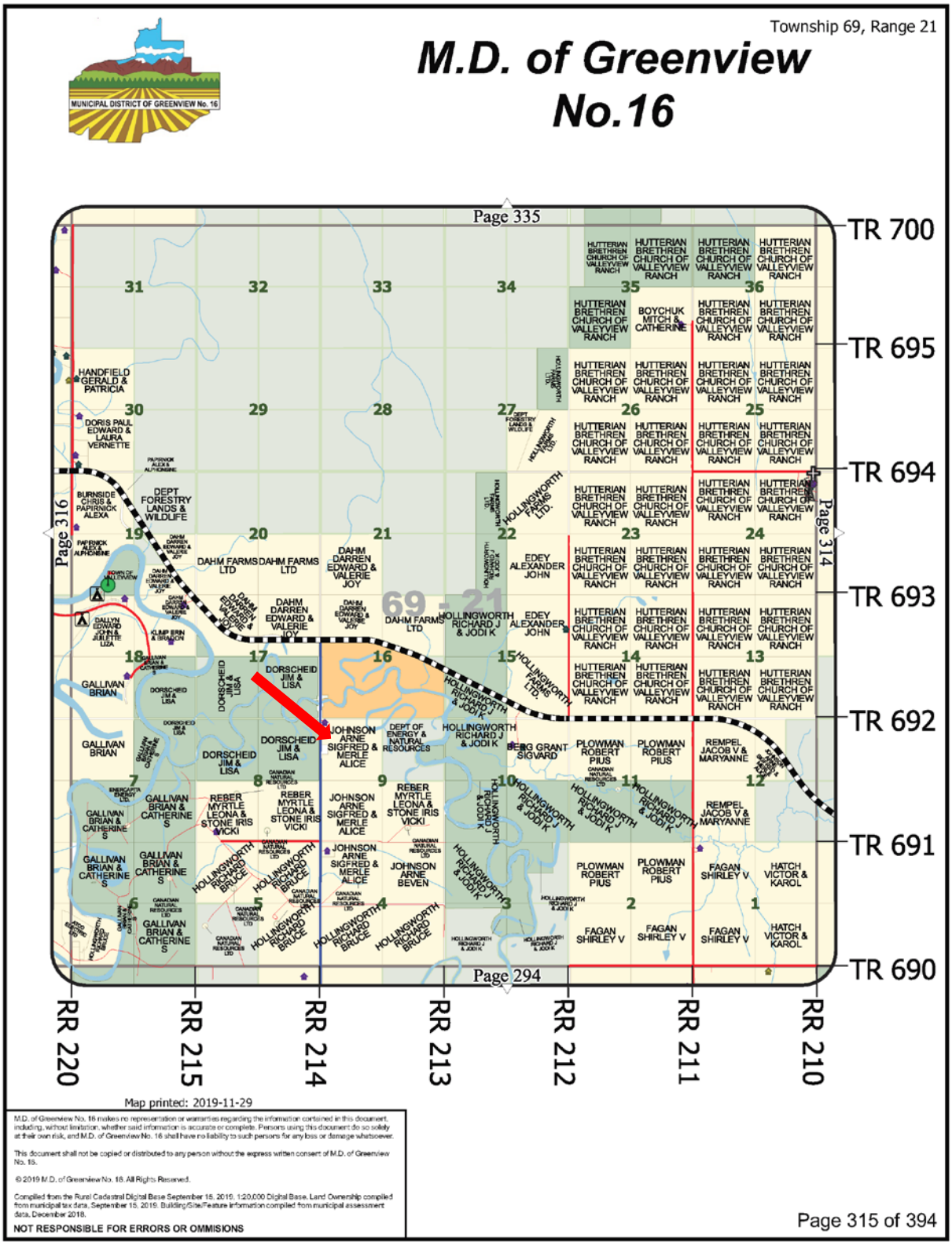

BYLAW NO. 20-848
MUNICIPAL DISTRICT OF GREENVIEW NO. 16

A Bylaw of the Municipal District of Greenview No. 16, in the Province of Alberta, for the purpose of closing to public travel, and creating title to a portion(s) of a public roadway in accordance with Section 22 of the *Municipal Government Act*, Chapter M26.1, Revised Statutes of Alberta 2000, as amended.

WHEREAS the lands hereafter described are no longer required for public travel; and

WHEREAS application has been made to Council to have the roadway closed; and

WHEREAS the Council of the Municipal District of Greenview No. 16 deems it expedient to provide a bylaw for the purpose of closing to public travel certain roads, or portions thereof, situated in the said municipality, and therefore disposing of same; and

WHEREAS, notice of the intention of Council to pass a bylaw has been given in accordance with Section 606 of the *Municipal Government Act*; and

WHEREAS, Council was not petitioned for an opportunity to be heard by any person claiming to be prejudicially affected by the bylaw.

NOW THEREFORE BE IT RESOLVED that the Council of the Municipal District of Greenview No. 16 in the Province of Alberta, duly assembled, does hereby close to public travel for the purpose of creating title to the following described original government road allowance, subject to rights of access granted by other legislation:

PLAN 2761PX
ALL THAT PORTION OF ROAD LYING WITHIN PLAN 192 _____
CONTAINING 1.05 HA (2.60 ACRES) MORE OR LESS
EXCEPTING THEREOUT ALL MINES AND MINERALS

all as shown on Schedule "A" of this bylaw.

This Bylaw shall come into force and effect upon the day of final passing.

Received first reading this _____ day of _____, 2020.

_____
REEVE

_____
CHIEF ADMINISTRATIVE OFFICER

APPROVED this _____ day of _____, 20___.

_____

MINISTER OF TRANSPORTATION

Received second reading this _____ day of _____, 20__.

Received third reading and passed this _____ day of _____, 20__.

_____

REEVE

_____

CHIEF ADMINISTRATIVE OFFICER

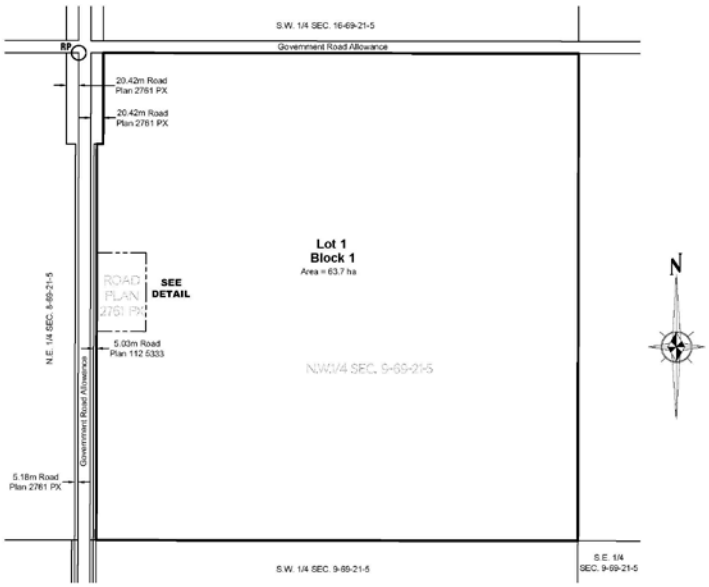

TABLE OF AREAS

LOT 1, BLOCK 1		
From N.W. 1/4 Sec. 9-69-21-5	=	62.67 ha
Closed portion of Road Plan 2761 PX	=	1.05 ha
Total	=	63.7 ha

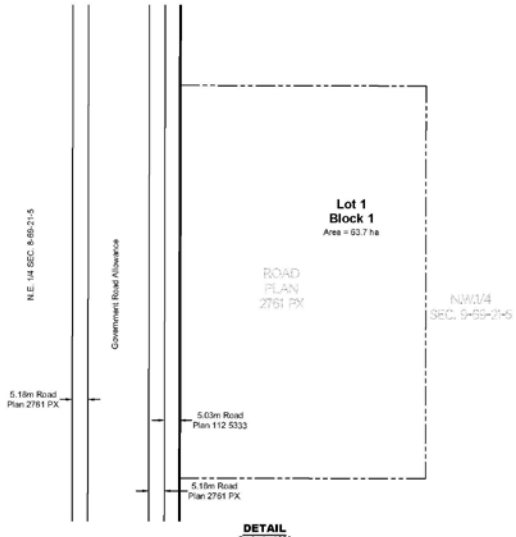

DETAIL
Scale 1 : 1000

PLAN No.
ENTERED AND REGISTERED
ON _____
INSTRUMENT No. _____

A.D. REGISTRAR
LAND TITLES OFFICE

DESCRIPTIVE PLAN

SHOWING CONSOLIDATION

of

CLOSED PORTION OF ROAD PLAN 2761 PX

and the remainder of

N.W.1/4 SEC. 9 TWP. 69 RGE. 21 W.5M.

all within

N.W.1/4 SEC. 9 TWP. 69 RGE. 21 W.5M.

MUNICIPAL DISTRICT OF GREENVIEW NO. 16

ALBERTA
2019

SCALE = 1:5000
0 100 200

LEGEND:

Geo-Reference Point shown thus: RP

Parallel lines are indicated thus:

Right angles are indicated thus: 90°

Area to be registered by this plan bounded thus and contains 63.7 hectares.

Distances are in meters & decimals thereof.

No field inspection was carried out and boundaries have not been established on the ground.

Bearings are grid and are referred to Central Meridian 117° West, UTM projection, NAD 83 (Original) datum and are derived from ATS V4.1.

Combined Scale factor used = 0.999501

Geo-Reference point: UTM NAD83 (Original) derived from ATS v4.1 } 6091101.10 N, 499148.53 E

ABBREVIATIONS:

ALS	Alberta Land Surveyor
ATS	Alberta Township System
E.	East
ha	Hectares
m	Meters
M.	Mound or Meridian
N.	North
NAD	North American Datum
Rge	Range
RP	Geo-Reference Point
S.	South
Sec.	Section
Twp.	Township
UTM	Universal Transverse Mercator
W.	West

SURVEYOR :
A.W. Shadid, A.L.S.

DATE OF SIGNING:
September 17th, 2019

ALBERTA LAND SURVEYORS' ASSOCIATION
PERMIT NUMBER
P 281
VELOCITY GEOMATICS INC.
c/o VELOCITY GROUP

OWNERS :
ARNE SIGRED JOHNSON
MERLE ALICE JOHNSON

Initials: KO - WS	Grande Prairie, Peace River, Beaumont — VELOCITY GROUP Surveying & Engineering — Unit 104 - 11302 98th Avenue, Grande Prairie, AB, T8V 8H4, Ph.: 587-359-8888	CAD File: 190318_DE
Plan Date: September 17, 2019		Office File: 190318

REQUEST FOR DECISION

SUBJECT:	**Partial Road Allowance Closure Request – West of NW-9-69-21-W5**				
SUBMISSION TO:	REGULAR COUNCIL MEETING	REVIEWED AND APPROVED FOR SUBMISSION			
MEETING DATE:	June 22, 2020	CAO:	DT	MANAGER:	SAR
DEPARTMENT:	PLANNING & DEVELOPMENT	GM:		PRESENTER:	PL
STRATEGIC PLAN:	Development				

RELEVANT LEGISLATION:

Provincial (cite) – Municipal Government Act Section 22(1): 'No road in a municipality that is subject to the direction, control and management of the municipality may be closed except by bylaw.'

Municipal Government Act Section 188: 'The previous readings of a proposed bylaw are rescinded if the proposed bylaw (a) does not receive third reading within 2 years after first reading, or…'

Council Bylaw/Policy (cite) – N/A

RECOMMENDED ACTION:

MOTION: That Council approve the sale and consolidation of 1.05 hectare ± within Road Plan 2761 PX lying west of NW-9-69-21-W5 as shown on Schedule 'A' hereto, to Arne Sigfred Johnson and Merle Alice Johnson, for a total price of $2,520.00 plus GST, plus all associated survey and transfer costs, subject to Ministerial approval and third reading of Bylaw 20-848.

BACKGROUND/PROPOSAL:

Greenview received a road closure request from Arne and Merle Johnson on February 20, 2020, to close a portion of Road Plan 2761 PX as shown on the attached survey plan labeled Schedule 'A', being an area consisting of 1.05 hectares ± (2.59 acres). The area would subsequently be consolidated with the existing title to their agricultural quarter NW-9-69-21-W5 (Certificate of Title 112 369 890+5, cont. 62.67 hectares). The fair market value of the 1.05 hectares ± was calculated by Accurate Assessment at $2,520.00 and an Offer to Sell would be prepared for signature by Arne and Merle Johnson, the agreement also requiring reimbursement to Greenview of the survey and transfer costs.

In accordance with legislation notification of the proposed road closure was circulated to internal and external referral agencies and no negative concerns or comments were received. Administration feels that the closure does not, or will not in the future, cause undue hardship for the road network in this location with access available to the quarter from Range Road 214. Administration is recommending that Council sell the land to Arne and Merle Johnson as set out above, give First Reading to Bylaw No. 20-848 and establish a Public Hearing date of July 27, 2020 to allow the public to comment in accordance with legislative requirements.

BENEFITS OF THE RECOMMENDED ACTION:

1. The public hearing would be advertised once Council gives approval to recommendation.

DISADVANTAGES OF THE RECOMMENDED ACTION:

1. There are no perceived disadvantages to the recommended motion.

ALTERNATIVES CONSIDERED:

Alternative #1: Council has the option to deny the sale of the land for the price above.

FINANCIAL IMPLICATION:

Direct Costs:

Greenview would be responsible for the cost to advertise the public hearing, and all costs associated with the survey and transfer will be paid by the landowners.

STAFFING IMPLICATION:

There are no staffing implications to the recommended motion.

PUBLIC ENGAGEMENT LEVEL:

Greenview has adopted the IAP2 Framework for public consultation.

INCREASING LEVEL OF PUBLIC IMPACT

Consult

PUBLIC PARTICIPATION GOAL

Consult - To obtain public feedback on analysis, alternatives and/or decisions.

PROMISE TO THE PUBLIC

Consult - We will keep you informed, listen to and acknowledge concerns and aspirations, and provide feedback on how public input influenced the decision

---

FOLLOW UP ACTIONS:

Required circulation providing notification of the public hearing would be sent in accordance with legislation. Following the public hearing the proposed closure package would forwarded to Alberta Transportation for consideration, prior to returning to Council for second and third reading.

ATTACHMENT(S):

- Schedule 'A' - Tentative Plan
- Map Overview
- Bylaw 20-848

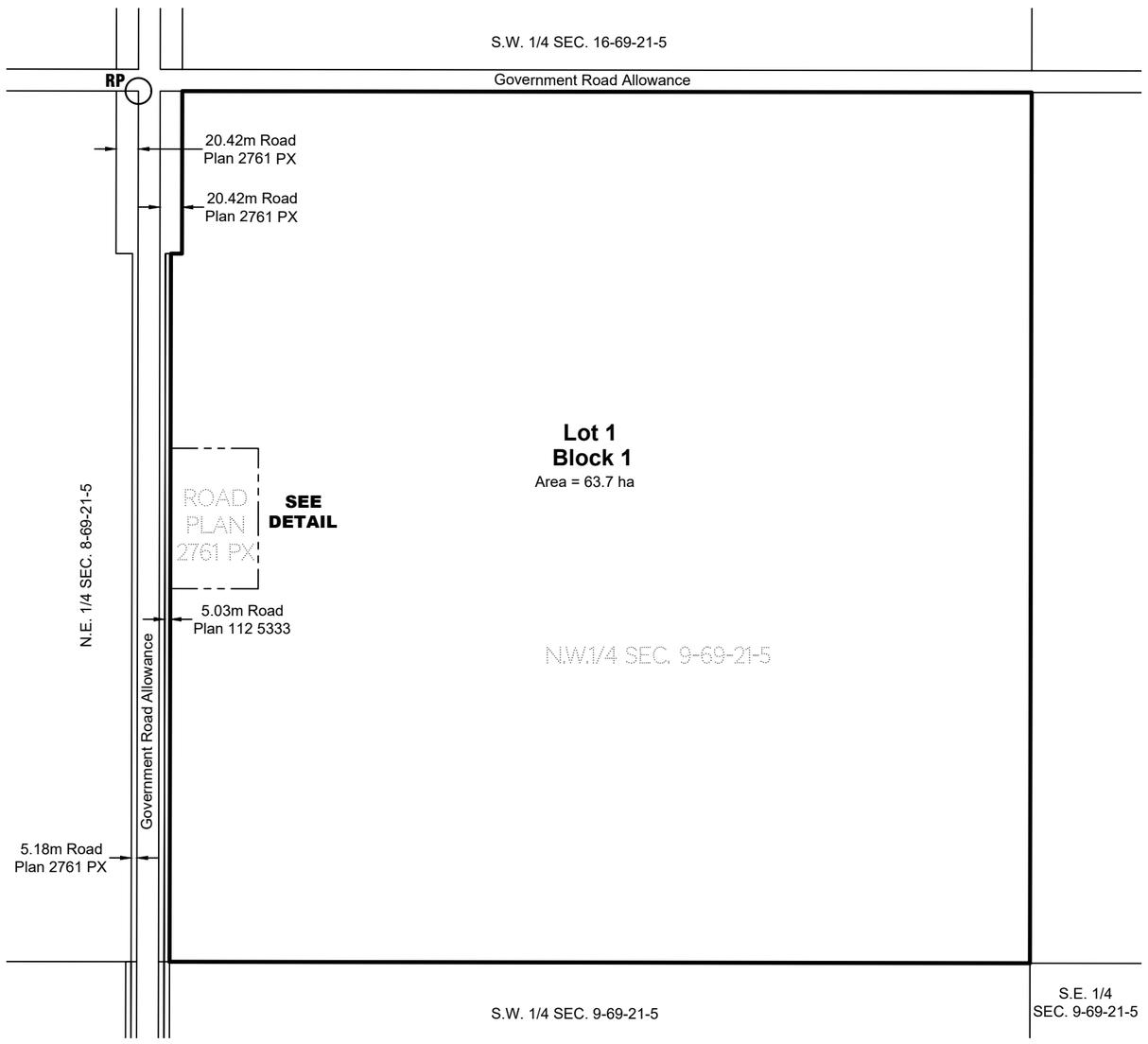

TABLE OF AREAS

LOT 1, BLOCK 1		
From N.W. 1/4 Sec. 9-69-21-5	=	62.67 ha
Closed portion of Road Plan 2761 PX	=	1.05 ha
Total	=	63.7 ha

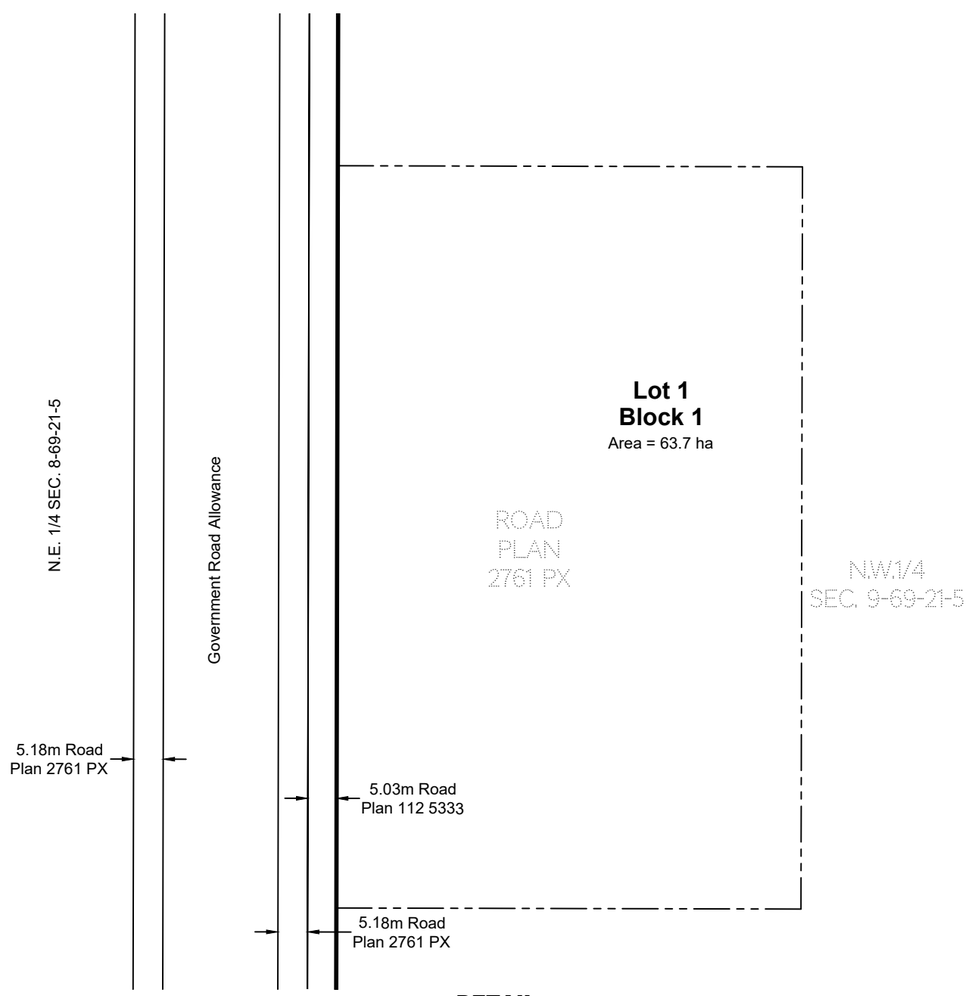

DETAIL
Scale 1 : 1000

PLAN No.

ENTERED AND REGISTERED

ON _____

INSTRUMENT No. _____

_____
A.D. REGISTRAR
LAND TITLES OFFICE

DESCRIPTIVE PLAN

SHOWING CONSOLIDATION

of

CLOSED PORTION OF ROAD PLAN 2761 PX

and the remainder of

N.W.1/4 SEC. 9 TWP. 69 RGE. 21 W.5M.

all within

N.W.1/4 SEC. 9 TWP. 69 RGE. 21 W.5M.

MUNICIPAL DISTRICT OF GREENVIEW NO. 16

ALBERTA
2019

SCALE = 1:5000
0 100 200

LEGEND:

Geo-Reference Point shown thus: RP

Parallel lines are indicated thus:

Right angles are indicated thus: 90°

Area to be registered by this plan bounded thus and contains 63.7 hectares.

Distances are in meters & decimals thereof.

No field inspection was carried out and boundaries have not been established on the ground.

Bearings are grid and are referred to Central Meridian 117° West, UTM projection, NAD 83 (Original) datum and are derived from ATS V4.1.

Combined Scale factor used = 0.999501

Geo-Reference point: UTM NAD83 (Original) derived from ATS v4.1 } 6091101.10 N. 490148.53 E.

ABBREVIATIONS:

ALS	Alberta Land Surveyor
ATS	Alberta Township System
E.	East
ha	Hectares
m	Meters
M.	Mound or Meridian
N.	North
NAD	North American Datum
Rge.	Range
RP	Geo-Reference Point
S.	South
Sec.	Section
Twp.	Township
UTM	Universal Transverse Mercator
W.	West

SURVEYOR :
A.W. Shadid, A.L.S.

DATE OF SIGNING:
September 17th, 2019

ALBERTA LAND SURVEYORS' ASSOCIATION
PERMIT NUMBER
P 281
VELOCITY GEOMATICS INC.
o/a VELOCITY GROUP

OWNERS :
ARNE SIGRED JOHNSON
MERLE ALICE JOHNSON

Initials: KO - WS	Grande Prairie Peace River Beaumont VELOCITY GROUP Surveying & Engineering Unit 104 - 11302 98th Avenue Grande Prairie, AB T8V 8H4 Ph.: 587-259-8888	CAD File: 190318_DE
Plan Date: September 17, 2019		Office File: 190318

FILE NO. R19-002 **LEGAL LOCATION: NW-09-69-21-W5**

APPLICANT: JOHNSON ARNE & MERLE **LANDOWNER: SAME**

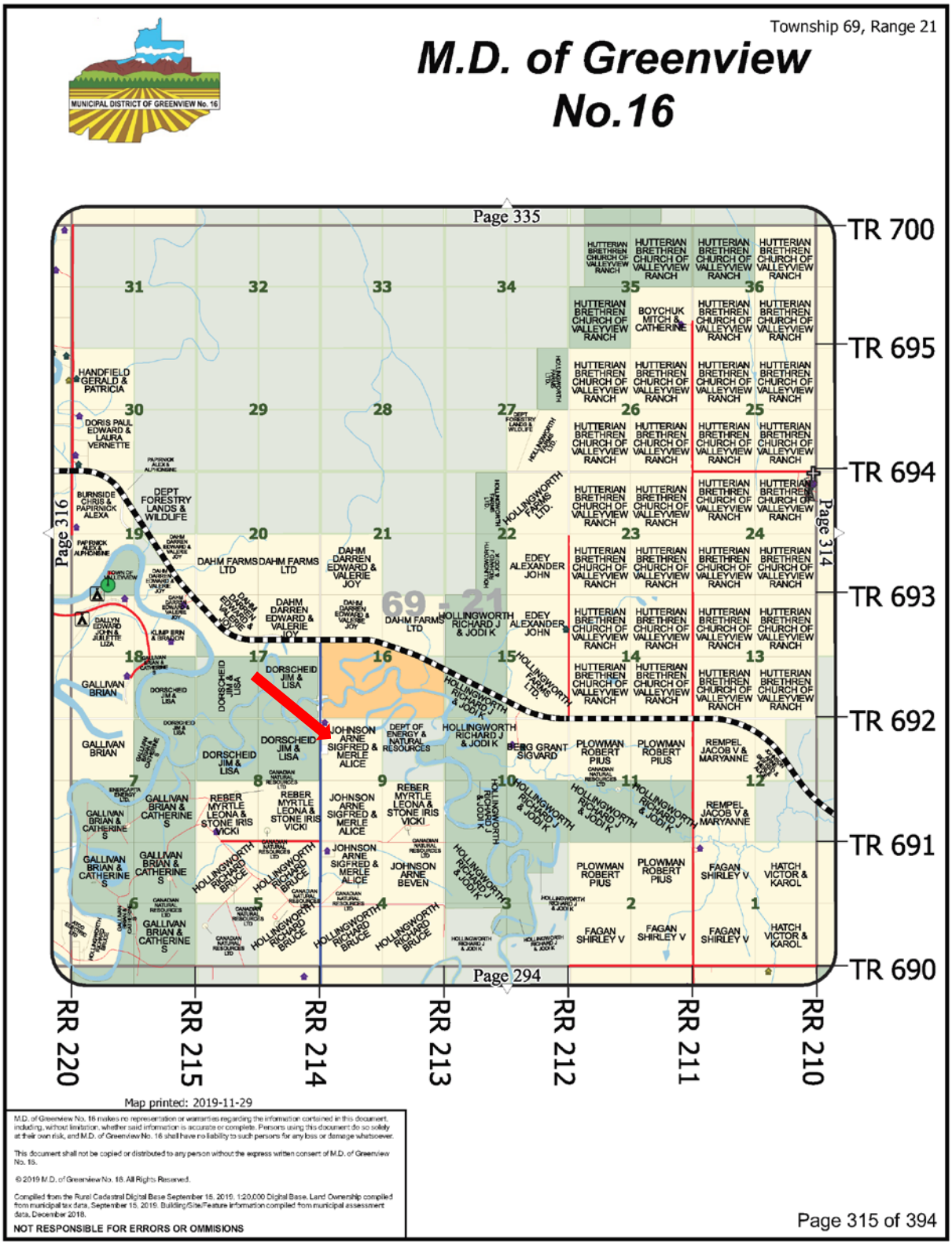

REQUEST FOR DECISION

SUBJECT:	**Purchase of 2020 Plow / Sand / Gravel Trucks**				
SUBMISSION TO:	REGULAR COUNCIL MEETING	REVIEWED AND APPROVED FOR SUBMISSION			
MEETING DATE:	June 22, 2020	CAO:	DT	MANAGER:	JF
DEPARTMENT:	OPERATIONS	GM:	RA	PRESENTER:	LB
STRATEGIC PLAN:	Level of Service				

RELEVANT LEGISLATION:
Provincial – N/A

Council Bylaw/Policy – Expenditure and Disbursement Policy (Policy No: 1018)

RECOMMENDED ACTION:
MOTION: That Council award the 2020 plow trucks purchase to Viking Cives Ltd. utilizing RMA Sourcewell Capital Purchasing Program with an upset limit of $621,800, with funds to come from Operations 2020 Capital Budget.

BACKGROUND/PROPOSAL:
Administration has requested quotes through RMA for two new plow trucks. Both are equipped with essentially the same equipment and rigging as our prior units, with chassis options. These new units will be direct replacements for existing units. Administration recommends the option of the Neway rear suspension chassis (Model 4900SB) as it will reduce the downtime and maintenance that is associated with the Airliner system.

Supplier	Make	Model	Price Total	Comments
Viking Cives Ltd.	Western Star	4900SB	$310,900 ea.	Airliner rear suspension (Cummins ISX15 engine)
Viking Cives Ltd.	Western Star	4900SB	$315,900 ea.	*Neway rear suspension (Cummins ISX15 engine) – *operator preference*
Viking Cives Ltd.	Western Star	4700SB	$301,100 ea.	Does not meet specifications of dual external air breathers; Neway not available and equipped with a smaller engine
Viking Cives Ltd.	Freightliner	114SD	$287,200 ea.	Does not meet specifications of dual external air breathers; Neway not available and equipped with a smaller engine
***Recommended by Operators**				

The plow truck replacements are for A104 (OP2001) and A1136 (OP2019) for the Valleyview area. The above recommended motion is within the approved 2020 Capital budget.

BENEFITS OF THE RECOMMENDED ACTION:

1. The benefit of Council accepting the recommended motion is the trucks can be ordered for the 2020 season as quick as possible.

DISADVANTAGES OF THE RECOMMENDED ACTION:

1. There are no perceived disadvantages to the recommended motion

---

ALTERNATIVES CONSIDERED:

Alternative #1: Council has the alternative to re-tender the purchase of the 2020 plow trucks; this is not recommended because it could delay the delivery date.

Alternative #2: Council has the alternative to choose one of the other chassis options; this is not recommended because the location of the engine tucked under the firewall makes the engine less accessible for repairs and maintenance.

FINANCIAL IMPLICATION:

Direct Costs: $621,800

Ongoing / Future Costs: Ongoing maintenance as required for life of unit while in service for Greenview.

STAFFING IMPLICATION:

There are no staffing implications to the recommended motion.

PUBLIC ENGAGEMENT LEVEL:

Greenview has adopted the IAP2 Framework for public consultation.

INCREASING LEVEL OF PUBLIC IMPACT

Inform

PUBLIC PARTICIPATION GOAL

Inform - To provide the public with balanced and objective information to assist them in understanding the problem, alternatives, opportunities and/or solutions.

PROMISE TO THE PUBLIC

Inform - We will keep you informed.

FOLLOW UP ACTIONS:
Administration will inform the interested parties of Council's decisions accordingly.

Attachments

- Neway Design
- Airliner Design
- Quotations

Neway Design:

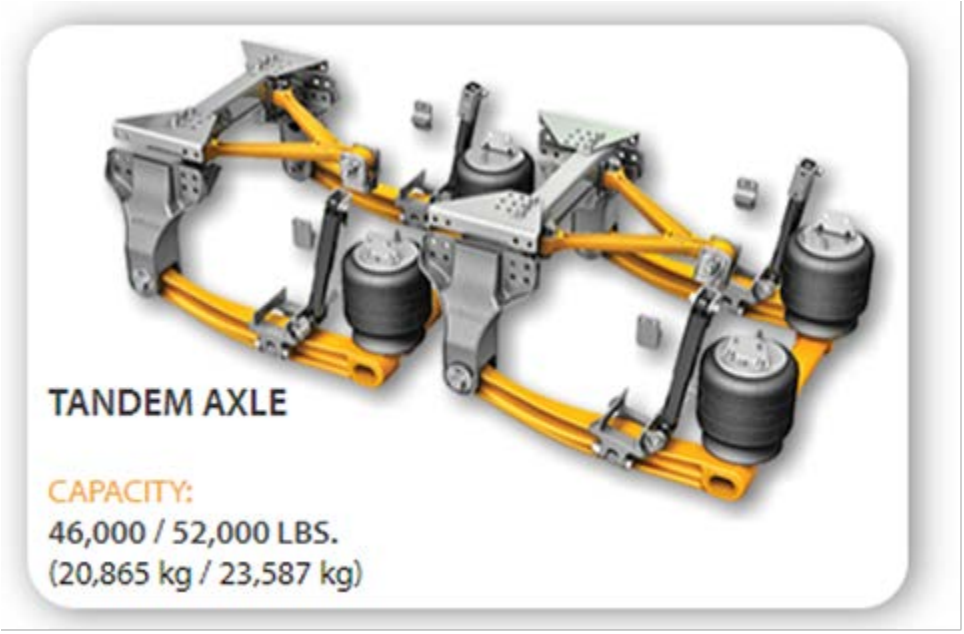

Airliner Design:

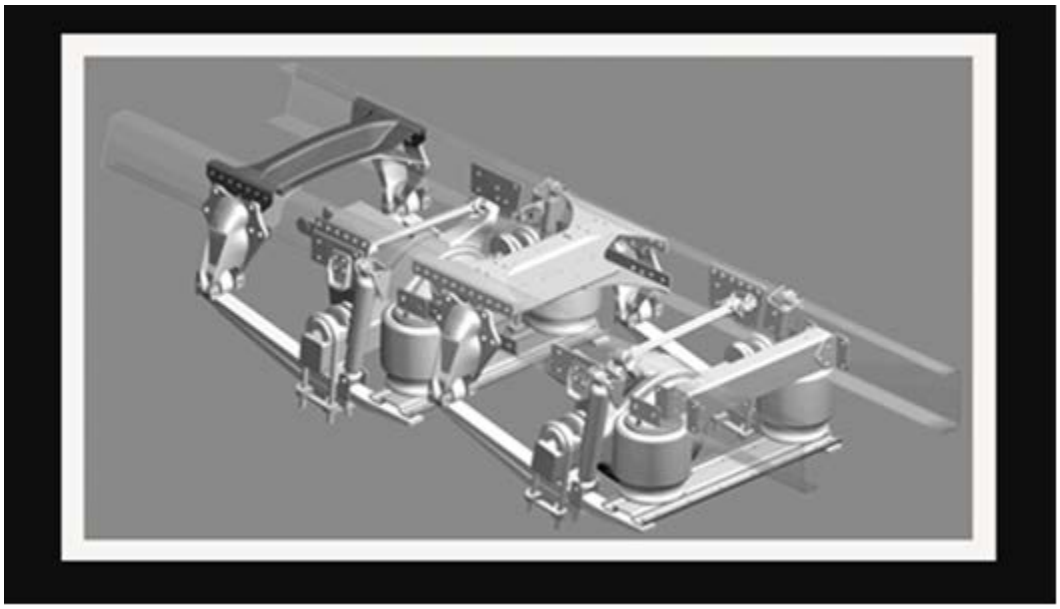

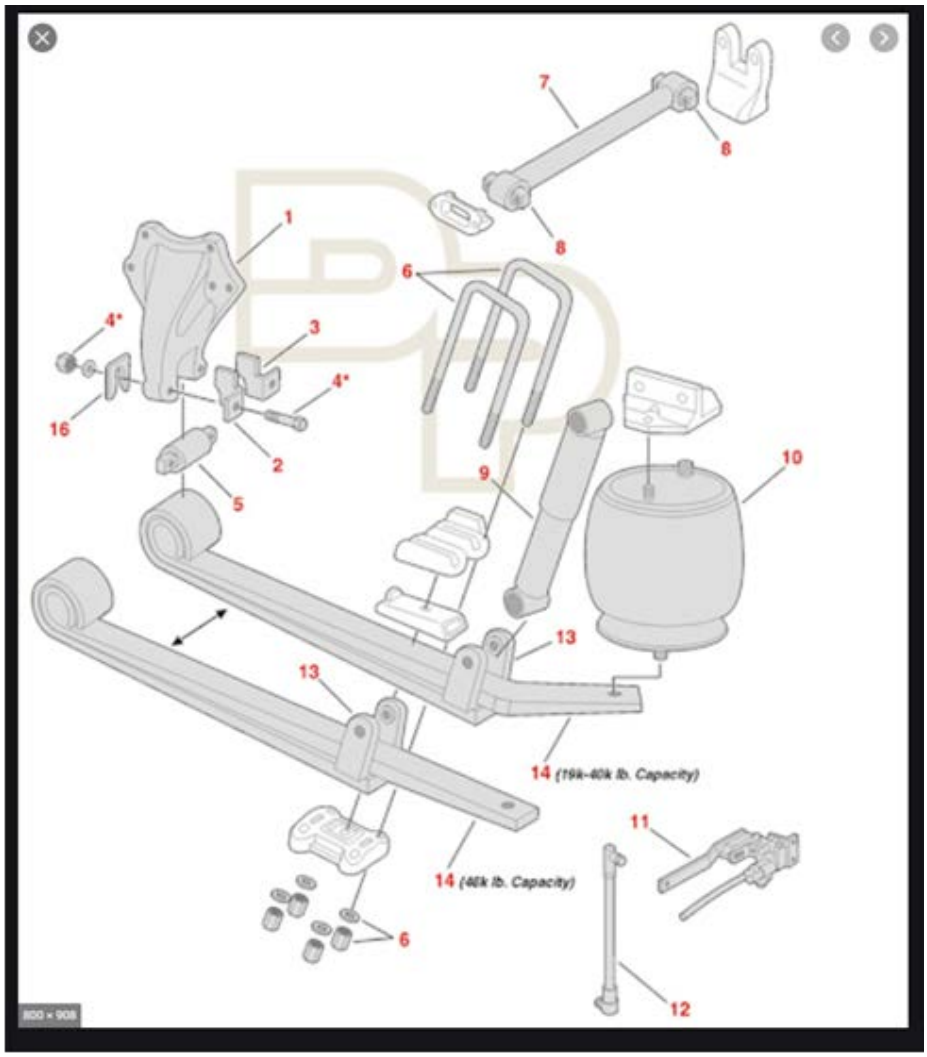

PRICE QUOTATION

Phone: 587-620-9201
www.vikingcives.com
10500 48 St. SE
Calgary, AB
T2C 2B8

QUOTE #: KT20-025
DATE: May 29 2020
PROPOSED: 12 Weeks
SHIP DATE: Receipt of Chassis
TERMS: Net 30 Days
F.O.B.: Valleyview AB.
SALES PERSON: Kevin Turcan

TO: Municipal District of Greenview - No.16

ATTN: Lane Barks – Fleet Coordinator Mobile 1-780-552-0602 lane.barks@mdgreenview.ab.ca

RE: 2020 Plow Truck Sourcewell Quote

Viking-Cives Ltd. is pleased to supply this price quotation for the following equipment as described:

VCL Steel Rev Plows & Options

**** VCL36-12-45C, Steel Reversible Plow, 12' moldboard w/ 45-degree compression spring full trip moldboard, 36" high, 9' 8" clearing path @ 35°***

Standard Features:

1. Heavy duty tubular push frame, 10-gauge brake formed steel moldboard construction and 100% continuous welds on the moldboard ribs. Perfect for high speed plowing.

2. Power reversing push frame can discharge snow left or right.

3. 3 x slotted trip lugs allow the plow to trip when encountering speed bumps and other obstacles.

4. Adjustable trip spring assembly provides safe tripping action in a variety of conditions.

5. Adjustable moldboard angle for enhanced edge efficiency. Shear bolts on moldboard brace protect the plow components and truck.

6. Adjustable push frame shoes.

7. Grade 70 chain.

**** 1/2 x 8 x 144" steel cutting edge, 12" center punched.***

**** 2 x Curb shoe kit 12" punched.***

**** 2 x Cast steel 12" punched moldboard shoe.***

**** Cast steel mushroom shoe install kit.***

**** Western Canada style quick attach lug and bar***

**** Rubber snow deflector 1/2" x 12" kit c/w mounting hardware***

**** 2 x 36" plow marker whip, fluorescent orange***

**** Baril DCC-181 Finish w/ corrosion protection: Medium gloss black***

**** Drive frame shall come with an adjustable parking stand.***

Plow Harness & Options

* ***VCL500LM - AB - Level Lift Low Mount Harness includes 5/8" 44w tail-plates to suit chassis, plow lift yolk and 4x10 plow lift cylinder.***
* ***Heated LED plow Lights***
* ***Adjustable hood mounted plow light kit - Aluminum***

Wing Harness & Options

* ***VCL125 AHW-R Rear mount wing. Includes front post assembly and rear post assembly. Includes AHW trip hinge block.***
* ***Rear wing harness mounted heated 4" Square, 3000 Lumen, LED floodlight c/w mounting bracket and wiring harness***
* ***Baril DCC-181 Finish w/ corrosion protection: Medium gloss black***

Wing Moldboards & Options

* ***VCL144AHW moldboard c/w push arms. Ultra-heavy-duty panel construction for extreme conditions. Pre-punched cutting-edge holes for easy blade installation. Moldboard curvature excels at casting snow farther from road. 10' cutting edge. Includes ratchet jack and end of wing 4" red clearance light.***
* ***1/2 x 8 x 120" steel cutting edge, 12" center punched.***
* ***2 x Cast steel 12" punch moldboard shoe.***
* ***Baril DCC-181 Finish w/ corrosion protection: Medium gloss black***

Proline Bodies

* ***PL1415LW-II 10.7 cu yd water level capacity (13.7 cu yd w/ 10" sideboards) 8.2 m3 water level capacity (10.5 m3 w/ 10"sideboards).***

Standard Features:

1. ***U-Style design - continuous roll formed sides with no brakes for optimal material flow to the main conveyor. Specifically designed for sand, salt and aggregate material spreading.***
2. ***Self-tensioning chain ensures that the chain is functioning properly, and at proper tension.***
3. ***Front discharge.***
4. ***Double acting tailgate for carrying large items.***
5. ***Air tailgate release for easy material dumping***
6. ***Body prop dump hinge for operator safety.***
7. ***Durable 3/16" Corten sides resist material wear & corrosion.***
8. ***Inspection ladder shall be 15" wide located on driver's side at front of box.***
9. ***Top lift hoist cylinder.***

Proline Options

* ***Asphalt door in tailgate***
* ***Shovel holder installed on driver's side front.***
* ***Main conveyor sensor motor in lieu of standard 6 cu. in. w/o adapter cable***
* ***Hydraulically operated front discharge gate (no position feedback)***
* ***Steel main conveyor cover.***
* ***Main conveyor cover, clean out screen to be 'PINNED', not bolt on.***
* ***12" cab shield***
* ***Grote "Ultra Blue Seal" - LED body lighting kit c/w license plate lamp, LH and RH 2-1/2" round red LED rear clearance, 6" oval LED back-up, 2 x 6" oval red LED stop/turn/tail, front side 2-1/2" marker lights.***
* ***Gravity hopper mounted directly below main conv discharge with single center spinner.***
* ***Cross conveyor mounted heated 4" square, 3000 lumen, LED floodlight c/w mounting bracket and wiring harness.***
* ***VCL manufactured air tarp kit c/w Aluminum tarp arms***
* ***Mesh tarp cover proline body.***
* ***Galvanized material screen kit.***
* ***Cougar Hydraulic THD-25-YW-M0 Vibrator & Safety Cable Kit***
* ***Dupont Imron Elite Finish w/ chromate epoxy Dupont CR2580 primer:***
* ***Paint Code: IMRON - (N0016EF) DOVE GREY***

Chassis Options

* ***Pintle plate and bracing for pintle hooks rated > 30,000# MGTW c/w Baril DCC-181 finish - medium gloss black***
* ***Premier 370A with air plunger and 2" tow eyes 90,000 # MGTW***
* ***Standard blue and red glad hands.***
* ***Grote #76983 high intensity amber rotating mini-bar w/o pedestal mount***
* ***Pedestal mount for beacon light.***
* ***7 pin electric trailer plug.***
* ***Roof Mounted Beacon Lights: Each Cab Corner LED 9" Base x 7" Height - CHASSIS DEALER SUPPLIED***

Alberta Lighting

* ***Alberta stainless steel upper reds***

Electric / Hydraulic Controls

- ***Truck Tronics - ST100 SERIES controller / joystick assembly.***
- ***Hydraulic discharge gate cylinder.***
- ***Parker L90 hydraulic valve assembly.***
- ***Parker load sense PAVC100 hydraulic pump***
- ***Low oil level indicator w/in cab warning light and buzzer.***
- ***Stainless steel back of cab 170 litre hydraulic tank.***
- ***Standard hydraulic oil***
- ***Ikron high pressure filter ass'y w/10-micron absolute filter***
- ***Standard 2 wire Hydraulic hose and hose ends - Aeroquip 100R16 2 Wire GH781 with brazen resistant cover.***
- ***Stainless steel hydraulic lines – Body & Chassis***
- ***Stainless steel valve enclosure assembly.***
- ***Auxiliary switch box, includes 16 illuminated push buttons to control lighting.***
- ***Swivel pedestal console cab mount***
- ***Air Switches: TAIL / TARP / PINTLE***

NET SUPPLIED AND INSTALLED ……..……..……$113,400.00

All Applicable Taxes Extra.
QUOTE VALID FOR 30 DAYS.

Respectfully Submitted,

Kevin Turcan

** NOTES FOR THE ABOVE-QUOTED EQUIPMENT **

1) The price and terms on this quotation are not subject to verbal changes or other agreements unless approved in writing by the home office of the seller. All quotations and agreements are contingent upon strikes, accidents, fires, availability of material and all other causes beyond our control. Prices are based on cost and conditions existing on the date of quotation and are subject to changes by the seller before final acceptance.

2) Typographical and stenographic errors are subject to correction.

3) Conditions not specifically stated herein shall be governed by the established trade customs. Terms inconsistent with those stated herein which may appear on purchaser's final order will not be binding on the Seller.

4) Quote prices do not include alteration or relocation of exhaust, battery box, air dryer, or fuel tank.

5) Customer to ensure chassis to be supplied is suitable for installation & operation of equipment quoted. Any possible required chassis modifications are not included in quoted price.

6) Copy of chassis specifications with codes is to be provided to Viking in order to complete review of chassis specifications & completion of installation layout drawing to confirm required CA to accommodate installation. Please ensure that all relevant chassis builds codes that are required and/or recommended are provided on chassis when landed at VCL.

7) Any chassis modifications that may be required to accommodate installation of equipment quoted is NOT included in quoted price.

8) Quoted delivery time: The above-quoted delivery time is the best known at time of tender call and is subject to change based upon shop loading at time of chassis arrival to VCL.

9) Additional charges are applicable if any modifications in lighting/wiring connections are required. Fully powered chassis OEM plow light connections are required. Electrical connections, body builders plug in's etc., to be provided with chassis, back of cab or inside, to allow installation of auxiliary lighting and electrical connections, high amp system required.

10) Road Speed: Provision for spreader control system to pick up road speed is required.

A proposal for
MUNICIPAL DIST OF GREENVIEW 16

Prepared by
WESTERN STAR & FREIGHTLINER TRUCKS
Jerry Nayko

May 14, 2020

Western Star 4900SB

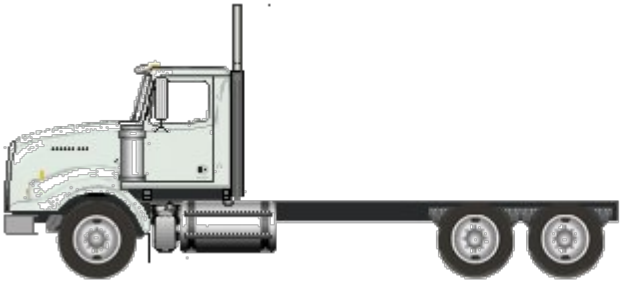

Components shown may not reflect all spec'd options and are not to scale

S P E C I F I C A T I O N P R O P O S A L

Data Code	Description
Price Level	
PRL-23W	WESTERN STAR PRL-23W (EFF:01/21/20)
Data Version	
DRL-016	SPECPRO21 DATA RELEASE VER 016
Vehicle Configuration	
001-424	WESTERN STAR 4900SA CHASSIS
004-221	2021 MODEL YEAR SPECIFIED
002-004	SET BACK AXLE - TRUCK
019-001	TRAILER TOWING PROVISION AT END OF FRAME FOR TRUCK
003-001	LH PRIMARY STEERING LOCATION
General Service	
AA1-003	TRUCK/TRAILER CONFIGURATION
AA6-003	DOMICILED, CANADA (OTHER THAN QUEBEC)
RCE-00F	FIXED CANADIAN EXCHANGE
A85-011	CONSTRUCTION SERVICE
A84-1GM	GOVERNMENT BUSINESS SEGMENT
AA4-003	DRY BULK COMMODITY
AA5-006	TERRAIN/DUTY: 10% (SOME) OF THE TIME, IN TRANSIT, IS SPENT ON NON-PAVED ROADS
AB1-008	MAXIMUM 8% EXPECTED GRADE
AB5-003	MAINTAINED GRAVEL OR CRUSHED ROCK - MOST SEVERE IN-TRANSIT (BETWEEN SITES) ROAD SURFACE
995-1A5	WESTERN STAR VOCATIONAL WARRANTY
A66-99D	EXPECTED FRONT AXLE(S) LOAD : 20000.0 lbs
A68-99D	EXPECTED REAR DRIVE AXLE(S) LOAD : 46000.0 lbs
A63-99D	EXPECTED GROSS VEHICLE WEIGHT CAPACITY : 66000.0 lbs
A70-99D	EXPECTED GROSS COMBINATION WEIGHT : 120000.0 lbs
Truck Service	
AA3-018	FRONT PLOW/END DUMP BODY
AF4-99D	EXPECTED EMPTY BODY WEIGHT : 4300.0 lbs
A88-99D	EXPECTED TRUCK BODY LENGTH : 14.0 ft
AE2-99D	EXPECTED TRUCK BODY WIDTH : 96.0 in
AF6-99D	EXP EMPTY BODY CG LOC FROM BODY FRT(A89) : 5.9 ft
A89-99D	BRAKING-EXPECTED CAB TO BODY CLEARANCE : 8.0 in
AF3-998	NO MFR'S/BODY TYPE IDENTIFICATION

Data Code	Description
AF7-99D	EXPECTED BODY/PAYLOAD CG HEIGHT ABOVE FRAME "XX" INCHES : 32.0 in
Engine	
101-3A0	CUM X15 505 HP @ 1800 RPM, 2000 GOV RPM, 1850 LB/FT @ 1150 RPM
Electronic Parameters	
79A-075	75 MPH ROAD SPEED LIMIT
79B-000	CRUISE CONTROL SPEED LIMIT SAME AS ROAD SPEED LIMIT
79K-004	PTO MODE ENGINE RPM LIMIT - 850 RPM
79M-001	PTO MODE BRAKE OVERRIDE - SERVICE BRAKE APPLIED
79N-001	PTO MODE CLUTCH OVERRIDE - CLUTCH ENABLED
79P-011	PTO RPM WITH CRUISE SET SWITCH - 825 RPM
79Q-014	PTO RPM WITH CRUISE RESUME SWITCH - 825 RPM
79S-001	PTO MODE CANCEL VEHICLE SPEED - 5 MPH
79U-007	PTO GOVERNOR RAMP RATE - 250 RPM PER SECOND
80P-998	NO FLEET SPEC FOR PARAMETERIZATION
80G-002	PTO MINIMUM RPM - 700
80J-002	REGEN INHIBIT SPEED THRESHOLD - 5 MPH
Engine Equipment	
99C-017	2016-2019 ONBOARD DIAGNOSTICS/2010 EPA/CARB/FINAL GHG17 CONFIGURATION
99D-011	2008 CARB EMISSION CERTIFICATION - CLEAN IDLE (INCLUDES 6X4 INCH LABEL ON LOWER FORWARD CORNER OF DRIVER DOOR)
13E-001	STANDARD OIL PAN
105-001	ENGINE MOUNTED OIL CHECK AND FILL
133-004	ONE PIECE VALVE COVER
014-041	DUAL POLISHED STAINLESS STEEL 13 INCH DONALDSON COWL MOUNTED 1-STAGE AIR CLEANERS WITH POLISHED STAINLESS STEEL BANDS
124-1DJ	DR 12V 160 AMP 36-SI BRUSHLESS QUADRAMOUNT PAD ALTERNATOR WITH REMOTE BATTERY VOLT SENSE
292-222	(3) DTNA GENUINE, HIGH TEMP AGM STARTING AND CYCLING, MIN 2775CCA, 570RC, THREADED STUD BATTERIES
290-1AC	PASSENGER SEAT BATTERY BOX VENTED TO OUTSIDE OF CAB
282-013	BATTERY BOX MOUNTED UNDER PASSENGER SEAT
291-017	WIRE GROUND RETURN FOR BATTERY CABLES WITH ADDITIONAL FRAME GROUND RETURN
289-006	PLASTIC BATTERY BOX COVER

Data Code	Description
180-100	EATON ADVANTAGE 15-1/2 INCH SELF ADJUSTING CLUTCH
183-008	TORQUE LIMITING CLUTCH BRAKE
181-004	ZERK FITTINGS WITH EXTENSION HOSES AT CLUTCH RELEASE BEARING AND X-SHAFT
18B-003	CUSTOMER REQUESTS MINIMUM CLUTCH TORQUE RATING OF 2050 LB-FT
107-045	CUMMINS NATURALLY ASPIRATED 18.7 CFM AIR COMPRESSOR WITH INTERNAL Safety VALVE
131-013	AIR COMPRESSOR DISCHARGE LINE
152-040	ELECTRONIC ENGINE INTEGRAL WARNING AND DERATE PROTECTION SYSTEM
128-047	CUMMINS INTEBRAKE COMPRESSION BRAKE WITH (2) SWITCHES; (1) ON/OFF AND (1) LOW/MEDIUM/HIGH RETARDATION LEVEL
016-1C2	RH OUTBOARD UNDER STEP MOUNTED HORIZONTAL AFTERTREATMENT SYSTEM ASSEMBLY WITH RH B-PILLAR MOUNTED VERTICAL TAILPIPE
28F-007	ENGINE AFTERTREATMENT DEVICE, AUTOMATIC OVER THE ROAD ACTIVE REGENERATION AND DASH MOUNTED SINGLE REGENERATION REQUEST/INHIBIT SWITCH
239-032	11 FOOT 00 INCH (132 INCH+0/-5.9 INCH) EXHAUST SYSTEM HEIGHT
233-017	STANDARD CURVE BRIGHT UPPER STACK(S)
237-1CR	RH CURVED VERTICAL TAILPIPE B-PILLAR MOUNTED ROUTED FROM STEP
23U-002	13 GALLON DIESEL EXHAUST FLUID TANK
30N-003	100 PERCENT DIESEL EXHAUST FLUID FILL
23Z-002	NON-POLISHED ALUMINUM DIAMOND PLATE DIESEL EXHAUST FLUID TANK COVER
43X-001	LH HEAVY DUTY STANDARD DIESEL EXHAUST FLUID TANK LOCATION
43Y-001	STANDARD DIESEL EXHAUST FLUID TANK CAP
242-016	ROUND PERFORATED SINGLE STAINLESS STEEL MUFFLER/TAILPIPE SHIELD
273-036	BORG WARNER (KYSOR) REAR AIR ON/OFF ENGINE FAN CLUTCH
276-002	AUTOMATIC FAN CONTROL WITH DASH SWITCH AND INDICATOR LIGHT, NON ENGINE MOUNTED
110-003	CUMMINS SPIN ON FUEL FILTER
118-001	FULL FLOW OIL FILTER
266-080	1570 SQUARE INCH COPPER/BRASS RADIATOR
267-006	MOUNTING FOR FIREWALL MOUNTED SURGE TANK
103-039	ANTIFREEZE TO -34F, OAT (NITRITE AND SILICATE FREE) EXTENDED LIFE COOLANT
171-007	GATES BLUE STRIPE COOLANT HOSES OR EQUIVALENT

Data Code	Description
172-001	CONSTANT TENSION HOSE CLAMPS FOR COOLANT HOSES
270-016	RADIATOR DRAIN VALVE
360-013	1350 ADAPTER FLANGE FOR FRONT PTO PROVISION
138-005	PHILLIPS-TEMRO 1500 WATT/115 VOLT BLOCK HEATER
166-005	PHILLIPS-TEMRO 300 WATT/115 VOLT OIL PREHEATER
140-041	CHROME COMMON BLOCK AND OIL PAN HEATER RECEPTACLE MOUNTED UNDER LH DOOR
155-055	DELCO 12V 39MT HD/OCP STARTER WITH THERMAL PROTECTION AND INTEGRATED MAGNETIC SWITCH
109-007	CAST IRON FRONT AND REAR ENGINE SUPPORTS
Transmission	
342-1BP	EATON FULLER RTLO-18918B TRANSMISSION
Transmission Equipment	
353-054	VEHICLE INTERFACE WIRING WITH BODY BUILDER BLUNT CUT WIRE INTERFACE AT BACK OF CAB
347-001	CAST IRON CLUTCH HOUSING
362-1T6	CUSTOMER INSTALLED CHELSEA 489 SERIES PTO
363-003	PTO MOUNTING, BOTTOM OF MAIN TRANSMISSION
345-001	PAINTED SHIFT LEVER, SOLID LINKAGE
370-002	AIR TO OIL TRANSMISSION COOLER
35T-003	SYNTHETIC TRANSMISSION LUBE
Front Axle and Equipment	
400-1AC	MFS-20-133A 20,000# FL1 71.0 INCH KPI/3.74 INCH DROP SINGLE FRONT AXLE
402-030	MERITOR 16.5X6 Q+ CAST SPIDER CAM FRONT BRAKES, DOUBLE ANCHOR, FABRICATED SHOES
403-002	NON-ASBESTOS FRONT BRAKE LINING
419-023	CONMET CAST IRON FRONT BRAKE DRUMS
427-001	FRONT BRAKE DUST SHIELDS
409-006	FRONT OIL SEALS
408-001	VENTED FRONT HUB CAPS WITH WINDOW, CENTER AND SIDE PLUGS - OIL
416-022	STANDARD SPINDLE NUTS FOR ALL AXLES
405-002	MERITOR AUTOMATIC FRONT SLACK ADJUSTERS
536-055	TRW THP-60 POWER STEERING WITH RCH45 AUXILIARY GEAR
539-003	POWER STEERING PUMP
534-003	4 QUART POWER STEERING RESERVOIR

Data Code	Description
533-001	OIL/AIR POWER STEERING COOLER
40T-002	CURRENT AVAILABLE SYNTHETIC 75W-90 FRONT AXLE LUBE
Front Suspension	
620-025	20,000# TAPERLEAF FRONT SUSPENSION
619-002	THREADED SPRING PINS AND BUSHINGS - FRONT SUSPENSION
62G-005	ALUMINUM SPACER BLOCKS TO PROVIDE MAXIMUM ALLOWABLE POSITIVE FRAME RAKE
62H-001	CAST IRON SHACKLED FRONT AND REAR SPRING BRACKETS FOR FRONT SUSPENSION
410-001	FRONT SHOCK ABSORBERS
Rear Axle and Equipment	
420-058	RT-46-164 46,000# R-SERIES TANDEM REAR AXLE
421-456	4.56 REAR AXLE RATIO
424-001	IRON REAR AXLE CARRIER WITH STANDARD AXLE HOUSING
386-083	RPL35 MERITOR MAIN DRIVELINE
388-044	RPL25 MERITOR INTERAXLE DRIVELINE
452-006	DRIVER CONTROLLED TRACTION DIFFERENTIAL - BOTH TANDEM REAR AXLES
878-022	(1) INTERAXLE LOCK VALVE, (1) DRIVER CONTROLLED DIFFERENTIAL LOCK FORWARD-REAR AXLE VALVE AND (1) REAR-REAR AXLE VALVE
87A-005	INDICATOR LIGHT FOR EACH INTERAXLE LOCKOUT SWITCH
87B-008	INDICATOR LIGHT FOR EACH DRIVER CONTROLLED TRACTION DEVICE SWITCH
423-020	MERITOR 16.5X7 Q+ CAST SPIDER CAM REAR BRAKES, DOUBLE ANCHOR, FABRICATED SHOES
433-002	NON-ASBESTOS REAR BRAKE LINING
434-005	BRAKE CAMS AND CHAMBERS ON FORWARD SIDE OF DRIVE AXLE(S) WITH AUXILIARY SUPPORT BRACKETS
451-023	CONMET CAST IRON REAR BRAKE DRUMS
425-002	REAR BRAKE DUST SHIELDS
440-006	REAR OIL SEALS
426-101	WABCO TRISTOP D LONGSTROKE 2-DRIVE AXLE SPRING PARKING CHAMBERS
428-003	HALDEX AUTOMATIC REAR SLACK ADJUSTERS
41T-002	CURRENT AVAILABLE SYNTHETIC 75W-90 REAR AXLE LUBE
42T-001	STANDARD REAR AXLE BREATHER(S)
Rear Suspension	
622-108	AIRLINER 46,000# REAR SUSPENSION WITH CHAIN CLEARANCE
621-007	AIRLINER HIGH POSITION RIDE HEIGHT

Data Code	Description
431-004	WELDED AXLE SEATS SUPPLIED ON REAR AXLE
624-025	55 INCH AXLE SPACING
888-006	MANUAL DUMP VALVE FOR AIR SUSPENSION WITH INDICATOR LIGHT, GAUGE AND BUZZER
910-001	SINGLE AIR REAR SUSPENSION LEVELING VALVE
623-002	TRANSVERSE CONTROL RODS
625-006	HEAVY DUTY SUSPENSION OPTION - 23,000#,46,000#, 69,000# AIRLINER SUSPENSIONS
439-005	REAR SHOCK ABSORBERS - TWO AXLES (TANDEM) (AIR RIDE SUSPENSION)
Brake System	
490-100	WABCO 4S/4M ABS
871-023	REINFORCED NYLON AIR LINES
904-001	FIBER BRAID PARKING BRAKE HOSE
412-001	STANDARD BRAKE SYSTEM VALVES
432-013	COMBO-ABS/SERVICE BRAKE VALVE WITH 5.5 PSI CRACK PRESSURE
480-009	BW AD-9 BRAKE LINE AIR DRYER WITH HEATER
479-003	AIR DRYER MOUNTED INBOARD ON LH RAIL
460-040	STEEL AIR BRAKE RESERVOIRS MOUNTED PERPENDICULAR TO OUTSIDE RAIL
477-004	PULL CABLES ON ALL AIR RESERVOIR(S)
Trailer Connections	
481-998	NO TRAILER AIR HOSE
914-001	AIR CONNECTIONS TO END OF FRAME WITH GLAD HANDS FOR TRUCK AND NO DUST COVERS
296-010	PRIMARY CONNECTOR/RECEPTACLE WIRED FOR SEPARATE STOP/TURN, ABS CENTER PIN POWERED THROUGH IGNITION
297-001	SAE J560 7-WAY PRIMARY TRAILER CABLE RECEPTACLE MOUNTED END OF FRAME
308-003	SUPPLEMENTAL RECEPTACLE WIRING FOR THIRD AXLE LIFT
331-001	SUPPLEMENTAL J560 7-WAY RECEPTACLE LOCATED WITH PRIMARY RECEPTACLE
303-001	7-WAY RECEPTACLE END OF FRAME (IN ADDITION TO STANDARD)
334-001	ADDITIONAL SUPPLEMENTAL J560 7-WAY RECEPTACLE LOCATED WITH ADDITIONAL PRIMARY RECEPTACLE
310-998	NO TRAILER ELECTRICAL CABLE
Wheelbase & Frame	
545-560	5600MM (220 INCH) WHEELBASE
546-503	3/8X3-7/8X11-5/8 INCH DOUBLE CHANNEL 120KSI STEEL FRAME (3/8 INCH OUTER AND 1/4 INCH INNER)

Data Code	Description
552-039	1825MM (72 INCH) REAR FRAME OVERHANG
55W-007	FRAME OVERHANG RANGE: 71 INCH TO 80 INCH
549-049	29 INCH INTEGRAL FRONT FRAME EXTENSION
AC8-99D	CALC'D BACK OF CAB TO REAR SUSP C/L (CA) : 147.47 in
AE8-99D	CALCULATED EFFECTIVE BACK OF CAB TO REAR SUSPENSION C/L (CA) : 139.47 in
AE4-99D	CALC'D FRAME LENGTH - OVERALL : 371.37
ZF1-99D	FRAME HEIGHT TOP FRONT UNLADEN : 0.0 in
ZF2-99D	FRAME HEIGHT TOP FRONT LADEN : 32.23 in
ZF3-99D	FRAME HEIGHT TOP REAR UNLADEN : 43.61 in
ZF4-99D	FRAME HEIGHT TOP REAR LADEN : 41.95 in
FSS-0LH	CALCULATED FRAME SPACE LH SIDE : 59.21 in
FSS-0RH	CALCULATED FRAME SPACE RH SIDE : 28.21 in
AM6-99D	CALC'D SPACE AVAILABLE FOR DECKPLATE : 147.0 in
560-001	UNDERSLUNG CROSSMEMBER
553-001	SQUARE END OF FRAME
550-002	HEAVY DUTY FRONT CLOSING CROSSMEMBER
561-009	EXTRA HEAVY DUTY STEEL C-CHANNEL BOLTED CONSTRUCTION BACK OF TRANSMISSION CROSSMEMBER
562-022	EXTRA HEAVY DUTY STEEL C-CHANNEL BOLTED CONSTRUCTION MIDSHIP #1 CROSSMEMBER
572-043	1/4 INCH STEEL C-CHANNEL CROSSMEMBER WITHOUT A-FRAME, NON-TOWING
56C-001	STANDARD WEIGHT REAR SUSPENSION FORWARD CROSSMEMBER
565-002	HEAVY DUTY SUSPENSION CROSSMEMBER
568-006	EXTRA HEAVY DUTY STEEL C-CHANNEL BOLTED CONSTRUCTION REAR MOUNTED SUSPENSION CROSSMEMBER
Chassis Equipment	
674-998	NO LH OR RH BACK OF CAB ACCESS
592-998	NO DECK PLATE
556-1A0	14 INCH TAPERED SWEPTBACK CHROMED STEEL LOGGER BUMPER
558-027	REMOVABLE CENTERED FRONT TOW PIN FOR LOGGER BUMPER
574-001	BUMPER MOUNTING FOR SINGLE LICENSE PLATE
585-998	NO MUDFLAP BRACKETS
590-998	NO REAR MUDFLAPS
586-024	FENDER AND FRONT OF HOOD MOUNTED FRONT MUDFLAPS
551-007	GRADE 8 THREADED HEX HEADED FRAME FASTENERS
44Z-001	EXTERIOR HARNESSES WRAPPED IN CONDUIT

Data Code	Description
605-043	1/2 INCH T1 STEEL OUTER FULL FRONT FRAME EXTENSION REINFORCEMENT
601-009	CUSTOMER REQUESTS (1) COPY STANDARD BODY BUILDER DIAGRAM 2D DXF/PDF FORMAT ELECTRONICALLY TRANSMITTED
82R-998	NO PDI INSTALLED CHASSIS STEPS
Fifth Wheel	
578-998	NO FIFTH WHEEL
Fuel Tanks	
206-156	100 GALLON/378 LITER ALUMINUM FUEL TANK - RH
204-156	100 GALLON/378 LITER ALUMINUM FUEL TANK - LH
218-006	25 INCH DIAMETER FUEL TANK(S)
215-005	PLAIN ALUMINUM/PAINTED STEEL FUEL/HYDRAULIC TANK(S) WITH PAINTED BANDS
212-014	LH FUEL TANK MOUNTED FORWARD, RH FUEL TANK MOUNTED AFT
67J-003	LH FULL LENGTH FUEL TANK STEPS
664-001	PLAIN STEP FINISH
205-001	FUEL TANK CAP(S)
122-075	ALLIANCE FUEL FILTER/WATER SEPARATOR
216-020	EQUIFLO INBOARD FUEL SYSTEM
202-016	HIGH TEMPERATURE REINFORCED NYLON FUEL LINE
847-002	IN TANK FUEL LEVEL SENDER(S)
Tires	
093-0TB	MICHELIN XZY-3 425/65R22.5 20 PLY RADIAL FRONT TIRES
094-2EG	BRIDGESTONE M770 11R24.5 14 PLY RADIAL REAR TIRES
Hubs	
418-060	CONMET PRESET PLUS PREMIUM IRON FRONT HUBS
450-060	CONMET PRESET PLUS PREMIUM IRON REAR HUBS
Wheels	
502-091	ACCURIDE 29374A 22.5X12.25 10-HUB PILOT 4.75 INSET 10-HAND ALUMINUM DISC FRONT WHEELS
505-1J0	ACCURIDE 41362 ACCU-LITE 24.5X8.25 10-HUB PILOT 10-HAND ALUMINUM DISC REAR WHEELS
50T-998	NO FRONT AXLE WHEEL/HUB COVER
496-011	FRONT WHEEL MOUNTING NUTS
497-011	REAR WHEEL MOUNTING NUTS
Cab Exterior	
829-1AB	123 INCH BBC STEEL CONVENTIONAL CAB

Data Code	Description
82A-023	WESTERN STAR PAINTED ALUMINUM CAB SKIRT
650-045	RAISED AIR CAB MOUNTS WITH CHECK VALVE
648-002	NONREMOVABLE BUGSCREEN MOUNTED BEHIND GRILLE
667-022	LARGE PROFILE FRONT FENDER
754-007	2-3/4 INCH FENDER EXTENSIONS
678-034	LH AND RH EXTERIOR GRAB HANDLES WITH RUBBER INSERTS AND RH INTERIOR GRAB HANDLE MOUNTED TO A POST
645-004	STAINLESS STEEL RADIATOR SHELL/HOOD BEZEL WITH STYLIZED TILT HOOD HANDLE
646-002	RADIATOR MOUNTED GRILLE
640-008	GALVANEALED STEEL SEVERE SERVICE CAB
644-004	FIBERGLASS HOOD
643-004	SEVERE DUTY COPPER/BRASS RADIATOR HOOD MOUNTING
727-012	DUAL HADLEY SD-978 26 INCH RECTANGULAR AIR HORNS
726-001	SINGLE ELECTRIC HORN
728-002	DUAL HORN SHIELDS
657-1AG	DOORS AND IGNITION KEYED THE SAME
327-066	DUAL AMBER LED CLASS I REVOLVING ROOF MOUNTED BEACON LIGHTS WITH STAINLESS STEEL BRACKETS
312-085	DUAL RECTANGULAR LED HEADLIGHTS
302-022	LED MARKER LAMPS
311-001	DAYTIME RUNNING LIGHTS
294-032	FLUSH MOUNTED STOP/TAIL/BACKUP LIGHTS MOUNTED BELOW REAR MOST CROSSMEMBER
300-015	STANDARD FRONT TURN SIGNAL LAMPS
744-1DH	DUAL AERO BRIGHT FINISH HEATED DUAL AXIS 1-PIECE MOTORIZED MIRRORS WITH LIGHTS, LH AND RH REMOTE AND INTEGRAL CONVEX MIRRORS
797-002	CAB MOUNTED MIRRORS
796-001	102 INCH EQUIPMENT WIDTH
743-1AX	DUAL BRIGHT FINISH HEATED CONVEX MIRRORS WITH MANUAL ADJUSTMENT AND DUAL AXIS FOR 1-PIECE PRIMARY MIRRORS
74A-998	NO AUXILIARY MIRROR
729-001	STANDARD SIDE/REAR REFLECTORS
677-016	DUAL LEVEL CAB ENTRY STEPS ON BOTH SIDES
764-002	STAINLESS STEEL EXTERIOR SUN VISOR
768-046	17.5X35 INCH TINTED REAR WINDOW
661-006	TINTED DOOR GLASS
654-011	RH AND LH ELECTRIC POWERED WINDOWS
769-002	LOWER RH DOOR WINDOW WITH FRESNEL LENS

Data Code	Description
663-014	2-PIECE BONDED SOLAR GREEN GLASS WINDSHIELD
659-016	1.5 GALLON WINDSHIELD WASHER RESERVOIR MOUNTED UNDER CAB WITH REMOTE FILL
647-001	WHITE WINTERFRONT
Cab Interior	
707-1D0	GRAY VINYL BASE INTERIOR
70K-005	BLACK HARD TRIM
706-049	BASE LEFT HAND DOOR TRIM
708-049	BASE RIGHT HAND DOOR TRIM
772-007	BLACK MATS WITH DOUBLE INSULATION
785-007	DASH MOUNTED ASH TRAY AND LIGHTER, DRIVER SIDE
691-001	FORWARD ROOF MOUNTED CONSOLE
694-009	PASSENGER SIDE WING DASH MOUNTED GLOVE BOX WITH LOCKING DOOR
693-025	LH AND RH DOOR MAP POCKETS
741-015	(2) COAT HOOKS ON BACKWALL OF CAB
742-998	NO CUP/THERMOS HOLDER
680-034	TWO-TONE CHARCOAL UPPER/COOL GRAY LOWER SOFT TOUCH WING DASH WITH BLACK DRIVER SIDE COSMETIC UNDER DASH COVER
320-004	STANDARD WIRING
720-001	2-1/2 LB. FIRE EXTINGUISHER MOUNTED OUTBOARD OF DRIVER SEAT
700-014	HEATER, DEFROSTER AND AIR CONDITIONER WITH CONSTANT OUTLET TEMPERATURE CONTROL
701-001	STANDARD HVAC DUCTING
170-015	STANDARD HEATER PLUMBING
130-041	VALEO HEAVY DUTY A/C REFRIGERANT COMPRESSOR
698-001	RADIATOR MOUNTED AIR CONDITIONER CONDENSER
739-002	ADDITIONAL CAB SIDEWALL INSULATION
285-019	AUTOMATIC SELF-RESET CIRCUIT BREAKER IN MAIN DASH POWER DISTRIBUTION BOX AND CIRCUIT BREAKER/FUSE IN AUXILIARY POWER DISTRIBUTION BOXES
324-075	DOOR ACTIVATED DOME LIGHT, UNDER DASH LIGHT AND LH AND RH DOOR MOUNTED COURTESY LIGHTS
655-001	CAB DOOR LATCHES WITH MANUAL DOOR LOCKS
64C-002	BRIGHT DOOR HANDLES
722-028	TRIANGULAR REFLECTORS KIT WITHOUT FLARES SHIPPED LOOSE IN CAB

Data Code	Description
756-1E1	ELITE HIGH BACK AIR SUSPENSION DRIVER SEAT WITH HEAT, 3 CHAMBER AIR LUMBAR, INTEGRATED CUSHION EXTENSION, FORWARD AND REAR CUSHION TILT AND ADJUSTABLE SHOCK
760-038	NATIONAL 2 MAN TOOL/BATTERY BOX MID BACK NON SUSPENSION PASSENGER SEAT
759-007	DUAL DRIVER SEAT ARMRESTS, NO PASSENGER SEAT ARMRESTS
758-121	BLACK LAREDO LEATHER DRIVER SEAT COVER
761-121	BLACK LAREDO LEATHER PASSENGER SEAT COVER
763-006	3 POINT DRIVER AND PASSENGER AND 2 POINT CENTER FRONT SEAT BELT RETRACTORS
532-002	ADJUSTABLE TILT AND TELESCOPING STEERING COLUMN
540-005	2-SPOKE 20 INCH (500MM) BLACK STEERING WHEEL
765-002	DRIVER AND PASSENGER INTERIOR SUN VISORS
Instruments & Controls	
185-002	NON-ADJUSTABLE SUSPENDED PEDALS
732-018	ROYAL ROSEWOOD MATTE FINISH DRIVER INSTRUMENT PANEL
734-017	ROSEWOOD VINYL MATTE FINISH CENTER INSTRUMENT PANEL INSERT
870-004	STAR GAUGES WITH BLACK BEZELS
838-010	(1) TRACTOR AND (1) TRAILER BRAKE APPLICATION AIR GAUGE
840-002	2 INCH PRIMARY AND SECONDARY AIR PRESSURE GAUGES
198-025	INTAKE MOUNTED AIR RESTRICTION INDICATOR WITHOUT GRADUATIONS
721-001	97 DB BACKUP ALARM
149-012	CRUISE CONTROL SWITCHES IN THE CENTER PANEL
156-007	KEY OPERATED IGNITION SWITCH AND INTEGRAL START POSITION; 4 POSITION OFF/RUN/START/ACCESSORY
811-1AJ	DATASTAR DRIVER DISPLAY AND WARNING LAMP/LIGHT BAR DISPLAY, NON-DATA LINKED
160-038	HEAVY DUTY ONBOARD DIAGNOSTICS INTERFACE CONNECTOR LOCATED BELOW LH DASH
844-001	2 INCH ELECTRIC FUEL GAUGE
148-003	PROGRAMMABLE RPM CONTROL - ELECTRONIC ENGINE
866-009	DUAL REAR AXLE TEMPERATURE GAUGES WITH SENSOR SHIELD
856-001	ELECTRICAL ENGINE COOLANT TEMPERATURE GAUGE
854-001	ENGINE OIL TEMPERATURE GAUGE

Data Code	Description
864-001	2 INCH TRANSMISSION OIL TEMPERATURE GAUGE
372-034	DASH MOUNTED PTO CONTROL WITH INDICATOR LIGHT, GUARD AND PIPING
49B-998	NO VEHICLE STABILITY ADVISOR OR CONTROL
852-002	ELECTRIC ENGINE OIL PRESSURE GAUGE
858-002	STANDARD SMALL FACE PYROMETER
1U1-001	TOP OF DASH NAVIGATION PREP WITH POWER AND GROUND
746-116	AM/FM/WB WORLD TUNER RADIO WITH SIRIUS XM, CD PLAYER, BLUETOOTH, IPOD INTERFACE AND USB AND AUXILIARY INPUTS, J1939
747-002	ROOF/OVERHEAD CONSOLE MOUNTED RADIO
750-004	(4) RADIO SPEAKERS IN CAB
753-019	AM/FM ANTENNA MOUNTED ON RH FRONT A-PILLAR
748-026	POWER AND GROUND WIRING FOR CB RADIO IN OVERHEAD CONSOLE
752-998	NO CB ANTENNA, BRACKET OR LEAD
78C-003	INTEROPERABLE SDAR ANTENNA
810-043	ELECTRONIC KPH SPEEDOMETER WITH SECONDARY MPH SCALE, WITH ODOMETER
812-003	ELECTRONIC 3000 RPM TACHOMETER WITH HOUR METER
813-998	NO VEHICLE PERFORMANCE MONITOR
162-002	IGNITION SWITCH CONTROLLED ENGINE STOP
329-012	FOUR ON/OFF ROCKER SWITCHES IN THE DASH WITH INDICATOR LIGHTS AND WIRE ROUTED TO CHASSIS AT BACK OF CAB, LABEL OPT
482-001	BW TRACTOR PROTECTION VALVE
883-001	TRAILER HAND CONTROL BRAKE VALVE
842-001	2 INCH TURBO AIR PRESSURE GAUGE
836-001	2 INCH VOLTMETER
660-001	SINGLE ELECTRIC WINDSHIELD WIPER MOTOR WITH DELAY AND ARCTIC TYPE BLADES
304-026	CAB MARKER LIGHT AND HEADLIGHT SWITCH WITH SEPARATE SWITCH AND TERMINALS FOR CUSTOMER FURNISHED SNOW PLOW LIGHTS AND TURN SIGNALS
882-004	TWO VALVE PARKING BRAKE SYSTEM WITH WARNING INDICATOR
299-032	VSM NON CANCELING TURN SIGNAL SWITCH WITH INTEGRAL HEADLAMP DIMMER WITHOUT BRAKE OVERRIDE
298-036	PACIFIC INSIGHT ELECTRONIC FLASHER
Design	
065-000	PAINT: ONE SOLID COLOR
Color	

Data Code	Description
980-23N	CAB COLOR A: HSB907234 WHITE PPG BASE/CLEAR
96J-001	CAB INTERIOR PAINTED SAME AS CAB COLOR
986-020	BLACK, HIGH SOLIDS POLYURETHANE CHASSIS PAINT

Certification / Compliance

996-009	U.S. AND CANADA (DUAL CERTIFICATION), EXCEPT SALES CABS AND GLIDER KITS

Secondary Factory Options

998-001	CORPORATE PDI CENTER IN-SERVICE ONLY
95M-998	NO CUSTOMER FURNISHED MATERIAL SPECIFIED
999-014	DEALER HAS BEEN ADVISED OF AND ACCEPTED RESPONSIBILITY FOR MODIFICATIONS DUE TO POSSIBLE PTO/CHASSIS INTERFERENCE

Raw Performance Data

AE4-99D	CALC'D FRAME LENGTH - OVERALL : 371.37
AE8-99D	CALCULATED EFFECTIVE BACK OF CAB TO REAR SUSPENSION C/L (CA) : 139.47 in
AM6-99D	CALC'D SPACE AVAILABLE FOR DECKPLATE : 147.0 in

Extended Warranty

WAI-44B	CUM 2017 X15 HT1 TR TOW PERFORMANCE 5 YEARS / 100,000 MILES / 161,000 KM EXT WARR.FEX APPLIES
WAX-132	CUM 2017 X15 AT3 PERFORMANCE 5 YEARS / 100,000 MILES / 161,000 KM AFTERTREATMENT.FEX APPLIES
WBB-338	TC4: HD MODERATE 5 YEARS/100,000 MILES / 161,000 KM EXTENDED TRUCK COVERAGE. FEX APPLIES
WAK-159	EATON HEAVY DUTY MANUAL 1850 FT/LBS OR ABOVE TRANSMISSION EXTENDED WARRANTY, 5 YEARS/UNLIMITED MILES FEX
WBD-028	EATON HEAVY DUTY CLUTCH EXTENDED WARRANTY, 5 YEARS/500,000 MILES FEX
WAL-104	AXLE: FRONT/TANDEM REAR HD MODERATE 5 YEAR/100,000 MILE/161,000 KM EXTENDED AXLE COVERAGE.
WAG-014	TOWING: 5 YEARS/UNLIMITED MILES/KM EXTENDED TOWING COVERAGE $550 CAP FEX APPLIES

Dealer Installed Options

		Weight Front	Weight Rear
1	LEGACY EQUIVALENT SEAT & GEAR SHIFT EXTENSION	0	0
2	WINDSHIELD FAN	0	0
3	MANUALS	0	0
	Total Dealer Installed Options	0 lbs	0 lbs

(***) All cost increases for major components (Engines, Transmissions, Axles, Front and Rear Tires) and government mandated requirements, tariffs, and raw material surcharges will be passed through and added to factory invoices.

D I M E N S I O N S

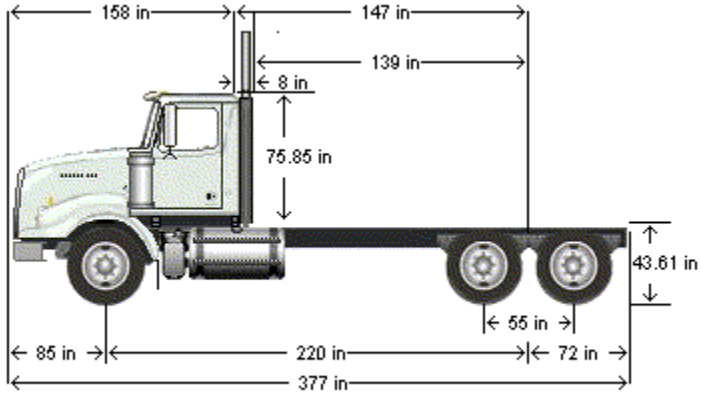

VEHICLE SPECIFICATIONS SUMMARY - DIMENSIONS

Model 4900SB
Wheelbase (545) .....5600MM (220 INCH) WHEELBASE
Rear Frame Overhang (552)..... 1825MM (72 INCH) REAR FRAME OVERHANG
Fifth Wheel (578) ..... NO FIFTH WHEEL
Mounting Location (577) ..... NO FIFTH WHEEL LOCATION
Maximum Forward Position (in).....0
Maximum Rearward Position (in) 0
Amount of Slide Travel (in).....0
Slide Increment (in).....0
Desired Slide Position (in).....0.0
Cab Size (829)..... 123 INCH BBC STEEL CONVENTIONAL CAB
Sleeper (682).....NO SLEEPER BOX/SLEEPERCAB
Exhaust System (016) .....RH OUTBOARD UNDER STEP MOUNTED HORIZONTAL AFTERTREATMENT SYSTEM ASSEMBLY WITH RH B-PILLAR MOUNTED VERTICAL TAILPIPE

TABLE SUMMARY - DIMENSIONS

Dimensions	Inches
Bumper to Back of Cab (BBC)	157.6
Bumper to Centerline of Front Axle (BA)	84.6
Min. Cab to Body Clearance (CB)	8.0
Back of Cab to Centerline of Rear Axle(s) (CA)	147.5
Effective Back of Cab to Centerline of Rear Axle(s) (Effective CA)	139.5
Back of Cab Protrusions (Exhaust/Intake) (CP)	6.6
Back of Cab Protrusions (Side Extenders/Trim Tab) (CP)	0.0
Back of Cab Protrusions (CNG Tank)	0.0
Back of Cab Clearance (CL)	8.0
Back of Cab to End of Frame	219.4
Cab Height (CH)	75.8
Wheelbase (WB)	220.5
Frame Overhang (OH)	71.9
Overall Length (OAL)	377.0
Rear Axle Spacing	55.0
Unladen Frame Height at Centerline of Rear Axle	43.6

Performance calculations are estimates only. If performance calculations are critical, please contact Customer Application Engineering.

F R A M E R B M

VEHICLE SPECIFICATIONS SUMMARY - FRAME RBM

Wheelbase (545) .....5600MM (220 INCH) WHEELBASE
Frame Rails (546)..... 3/8X3-7/8X11-5/8 INCH DOUBLE CHANNEL 120KSI STEEL FRAME (3/8 INCH OUTER AND 1/4 INCH INNER)(546)
Yield Strength (psi) 120000
Section Modulus (per rail) (cu in) 33.5
RBM (per rail) (lbf-in) 3807000
Inner Frame Reinforcement (547).....NO INNER FRAME REINFORCEMENT
Outer Frame Reinforcement (548) ..... NO OUTER FRAME REINFORCEMENT

TABLE SUMMARY - FRAME RBM

Item	Description / Value
Wheelbase	5600MM (220 INCH) WHEELBASE
Frame	3/8X3-7/8X11-5/8 INCH DOUBLE CHANNEL 120KSI STEEL FRAME (3/8 INCH OUTER AND 1/
Inner Frame Reinforcement	NO INNER FRAME REINFORCEMENT
Outer Frame Reninforcement	NO OUTER FRAME REINFORCEMENT
Yield Strength (psi)	120000
Section Modulus - per rail (cu. in.)	31.73
Frame RBM - per rail (lbf-in)	3807000

Performance calculations are estimates only. If performance calculations are critical, please contact Customer Application Engineering.

CONDENSED SPECIFICATION PROPOSAL

Data Code	Description
Vehicle Configuration	
001-424	WESTERN STAR 4900SA CHASSIS
002-004	SET BACK AXLE - TRUCK
Engine	
101-3A0	CUM X15 505 HP @ 1800 RPM, 2000 GOV RPM, 1850 LB/FT @ 1150 RPM
Engine Equipment	
128-047	CUMMINS INTEBRAKE COMPRESSION BRAKE WITH (2) SWITCHES; (1) ON/OFF AND (1) LOW/MEDIUM/HIGH RETARDATION LEVEL
016-1C2	RH OUTBOARD UNDER STEP MOUNTED HORIZONTAL AFTERTREATMENT SYSTEM ASSEMBLY WITH RH B-PILLAR MOUNTED VERTICAL TAILPIPE
Transmission	
342-1BP	EATON FULLER RTLO-18918B TRANSMISSION
Front Axle and Equipment	
400-1AC	MFS-20-133A 20,000# FL1 71.0 INCH KPI/3.74 INCH DROP SINGLE FRONT AXLE
Front Suspension	
620-025	20,000# TAPERLEAF FRONT SUSPENSION
Rear Axle and Equipment	
420-058	RT-46-164 46,000# R-SERIES TANDEM REAR AXLE
421-456	4.56 REAR AXLE RATIO
Rear Suspension	
622-108	AIRLINER 46,000# REAR SUSPENSION WITH CHAIN CLEARANCE
Wheelbase & Frame	
545-560	5600MM (220 INCH) WHEELBASE
546-503	3/8X3-7/8X11-5/8 INCH DOUBLE CHANNEL 120KSI STEEL FRAME (3/8 INCH OUTER AND 1/4 INCH INNER)
Fuel Tanks	
206-156	100 GALLON/378 LITER ALUMINUM FUEL TANK - RH
204-156	100 GALLON/378 LITER ALUMINUM FUEL TANK - LH
Tires	
093-0TB	MICHELIN XZY-3 425/65R22.5 20 PLY RADIAL FRONT TIRES
094-2EG	BRIDGESTONE M770 11R24.5 14 PLY RADIAL REAR TIRES
Wheels	
502-091	ACCURIDE 29374A 22.5X12.25 10-HUB PILOT 4.75 INSET 10-HAND ALUMINUM DISC FRONT WHEELS

Data Code	Description
505-1J0	ACCURIDE 41362 ACCU-LITE 24.5X8.25 10-HUB PILOT 10-HAND ALUMINUM DISC REAR WHEELS

Cab Exterior

829-1AB	123 INCH BBC STEEL CONVENTIONAL CAB

Color

980-23N	CAB COLOR A: HSB907234 WHITE PPG BASE/CLEAR
986-020	BLACK, HIGH SOLIDS POLYURETHANE CHASSIS PAINT

ITEMS NOT INCLUDED IN ADJUSTED LIST PRICE

Other Factory Charges

DELIVERY & ORDER PROCESSING CHARGE

(***) All cost increases for major components (Engines, Transmissions, Axles, Front and Rear Tires) and government mandated requirements, tariffs, and raw material surcharges will be passed through and added to factory invoices.

Q U O T A T I O N

WESTERN STAR 4900SA CHASSIS

SET BACK AXLE - TRUCK
CUM X15 505 HP @ 1800 RPM, 2000 GOV RPM, 1850 LB/FT @ 1150 RPM
EATON FULLER RTLO-18918B TRANSMISSION
RT-46-164 46,000# R-SERIES TANDEM REAR AXLE
AIRLINER 46,000# REAR SUSPENSION WITH CHAIN CLEARANCE
MFS-20-133A 20,000# FL1 71.0 INCH KPI/3.74 INCH DROP SINGLE FRONT AXLE
20,000# TAPERLEAF FRONT SUSPENSION
123 INCH BBC STEEL CONVENTIONAL CAB
5600MM (220 INCH) WHEELBASE
NO FIFTH WHEEL
3/8X3-7/8X11-5/8 INCH DOUBLE CHANNEL 120KSI STEEL FRAME (3/8 INCH OUTER AND 1/4 INCH INNER)
1825MM (72 INCH) REAR FRAME OVERHANG

			PER UNIT		TOTAL
VEHICLE PRICE	**TOTAL # OF UNITS (2)**	$	179,788	$	359,576
EXTENDED WARRANTY		$	13,767	$	27,534
DEALER INSTALLED OPTIONS		$	3,945	$	7,890
CUSTOMER PRICE BEFORE TAX		**$**	***197,500***	**$**	***395,000***
TAXES AND FEES					
TAXES AND FEES		$	0	$	0
OTHER CHARGES		$	0	$	0
TRADE-IN					
TRADE-IN ALLOWANCE		$	(0)	$	(0)
BALANCE DUE	**(LOCAL CURRENCY)**	**$**	**197,500**	**$**	**395,000**

COMMENTS:
Projected delivery on ___ / ___ / ___ provided the order is received before ___ / ___ / ___.

APPROVAL:
Please indicate your acceptance of this quotation by signing below:

Customer: X_____ Date: ___ / ___ / ___.

Daimler Truck Financial
Financing that works for you.

See your local dealer for a competitive quote from Daimler Truck Financial, or contact us at Information@dtfoffers.com.
Daimler Truck Financial offers a variety of finance, lease and insurance solutions to fit your business needs. For more information about our products and services, visit our website at www.daimler-truckfinancial.com.

REQUEST FOR DECISION

SUBJECT:	**Electric Vehicle Charging Infrastructure**				
SUBMISSION TO:	REGULAR COUNCIL MEETING	REVIEWED AND APPROVED FOR SUBMISSION			
MEETING DATE:	June 22, 2020	CAO:	DT	MANAGER:	KK
DEPARTMENT:	ECONOMIC DEVELOPMENT	GM:	GM	PRESENTER:	KT
STRATEGIC PLAN:	Infrastructure				

RELEVANT LEGISLATION:
Provincial (cite) –N/A

Council Bylaw/Policy (cite) –N/A

RECOMMENDED ACTION:
MOTION: That Council approve Administration to assist in the development of the Advisory Committee for the Northwestern Alberta Electric Vehicle Charging Station Project; and occupy a seat on the committee once it is active.

MOTION: That Council approve up to $10,000 for seed money to initiate and be a member of the advisory committee that will engage Community Energy Association to conduct further studies for placement of Electric Vehicle Charging Infrastructure within Northwest Alberta, with funds to come from the Economic Development budget.

BACKGROUND/PROPOSAL:
In the fall of 2019 Administration began researching Electric Vehicle Charging Infrastructure within Greenview. Since then a relationship has developed with Community Energy Association (CEA) through Energy Futures workshops.

Energy Futures hosted several events that Greenview Economic Development staff has attended to continue researching the potential Electric Vehicle Charging Infrastructure initiative. Substantial support of the development of a Northwest Alberta Electric Vehicle Charging Station project that parallels the "Peaks to Prairies" Electric Vehicle Charging project in Southern Alberta. CEA has mapped out a potential draft project that includes 15 charging station locations within Northwest Alberta. Key locations are Barrhead, Drayton Valley, Edson, Entwistle Junction, Fox Creek, Grande Cache, Grande Prairie, Hinton, Jasper, Nordegg, Rocky Mountain House, Saskatchewan River Crossing, Valleyview (Crooked Creek) Westlock and Whitecourt. Further location studies will be required to insure these are prime locations for charging stations.

The creation of an advisory committee is necessary at this time for an agreement with CEA to further conduct studies on these 15 locations. In order to do this, CEA is asking for $30,000 to conduct location studies and also apply for further funding in multiple different areas for the infrastructure and financial needs.

Administration sees value of Greenview being an early and active member on this advisory committee to ensure the interests of all of Greenview and each draft location that could fall within Greenview.

CEA has experience as the project Manager of "Peaks to Prairies" initiative. This project was able to acquire $2.2 Million in grants to help fund this Electric Vehicle Charging Infrastructure project in Southern Alberta and hopes to do the same for this project.

The Town of Edson has taken the initiative to send correspondence, already received by Greenview Council; expressing interest in collaborating and creating an advisory committee. To date Edson has received support from 5 other municipalities.

BENEFITS OF THE RECOMMENDED ACTION:

1. The benefit of Council accepting the recommended motion is that Greenview would take a leadership role in the creation of the Northwest Alberta Electric Vehicle Charging Station board and would be assisting in the creation of this first of kind, collaborative project in Northwest Alberta.

2. The benefit of Council accepting the recommended motion is, this initiative aligns with Greenview's Council strategic goals of supporting the economic development and tourism opportunities throughout Greenview.

3. The benefit of Council accepting the recommended motion is that Greenview would assist in lowering the carbon footprint within Northwestern Alberta.

DISADVANTAGES OF THE RECOMMENDED ACTION:

1. The potential sites for the location study results to indicate Greenview has limited locations for charging infrastructure.

ALTERNATIVES CONSIDERED:

Alternative #1: Council can approve participation at a lower level, however will not have precedence on the advisory committee.

Alternative #2: Council has the alternative to approve, amend or take no action to the recommended motions.

FINANCIAL IMPLICATION:

Direct Costs: Up to $10,000

Ongoing / Future Costs: N/A

STAFFING IMPLICATION:

There are no staffing implications to the recommended motion.

PUBLIC ENGAGEMENT LEVEL:

Greenview has adopted the IAP2 Framework for public consultation.

INCREASING LEVEL OF PUBLIC IMPACT

Inform

PUBLIC PARTICIPATION GOAL

Inform - To provide the public with balanced and objective information to assist them in understanding the problem, alternatives, opportunities and/or solutions.

PROMISE TO THE PUBLIC

Inform - We will keep you informed.

FOLLOW UP ACTIONS:

Administration will advise the lead partners of Council's decision.

ATTACHMENT(S):

- Draft Project Map – No Location Study done
- Correspondence from Town of Edson

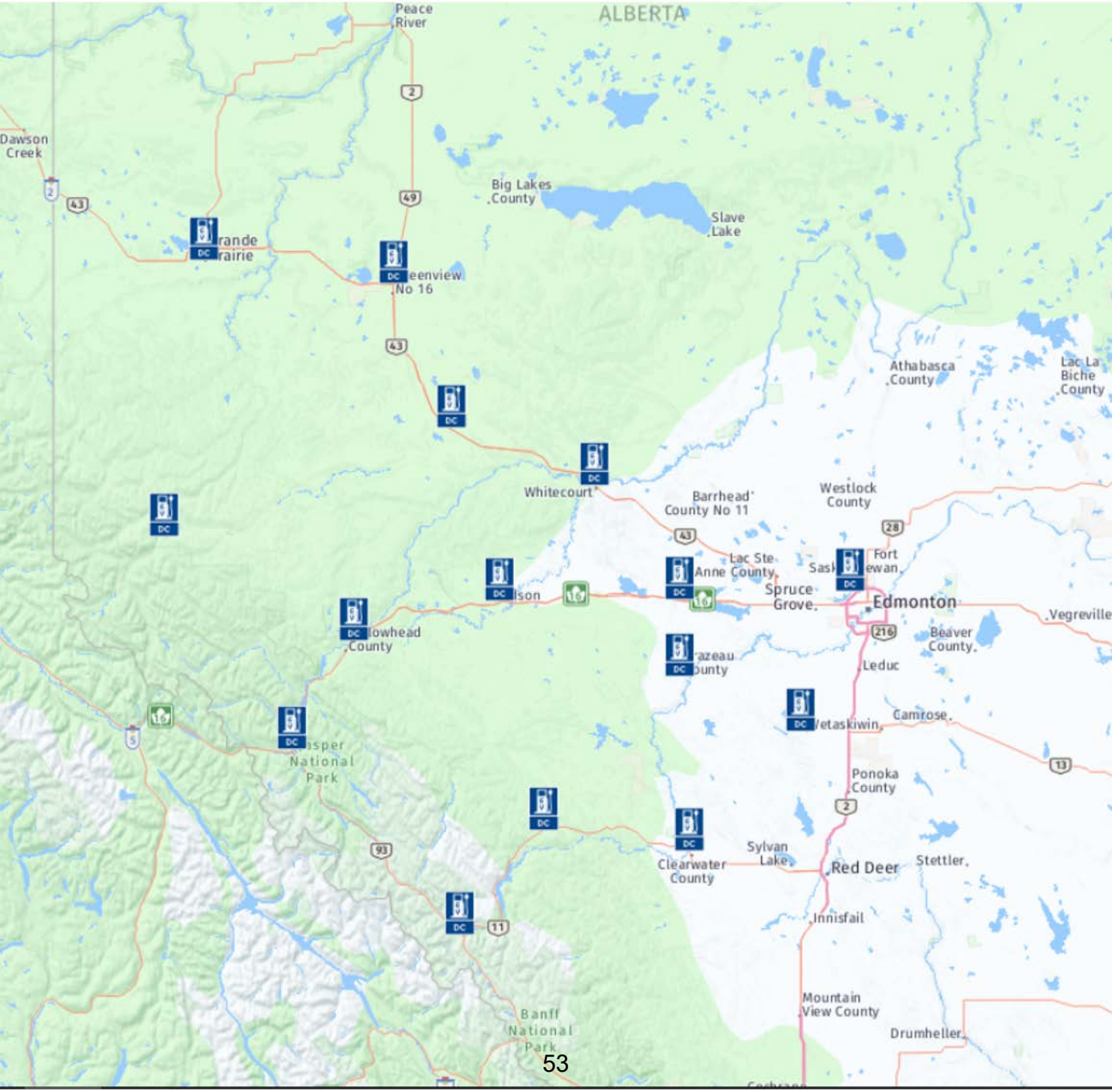
ALBERTA
Peace River
Dawson Creek
Big Lakes County
Slave Lake
Athabasca County
Lac La Biche County
Whitecourt
Barrhead County No 11
Westlock County
Lac Ste. Anne County
Spruce Grove
Edmonton
Vegreville
Beaver County
Leduc
Camrose
Ponoka County
Sylvan Lake
Red Deer
Stettler
Clearwater County
Innisfail
Mountain View County
Drumheller
Jasper National Park
Banff National Park

605 – 50th Street
P.O. Box 6300
Edson, AB T7E 1T7
www.edson.ca

TOWN OF EDSON
Office of the Mayor

May 25, 2020

Mayor and Council
Municipal District of Greenview
4806 - 36 Ave, Box 1079
Valleyview, Alberta T0H 3N0

Dear Mayors and Councils,

Re: Northwest Alberta Electric Vehicle (EV) Charging Network

The Mayor and Council for the Town of Edson endorse a regional collaborative initiative for a Northwest Alberta Electric Vehicle Charging Network. We would like to invite your municipality to join us in advocating for senior government, sector-related supports and grants for this initiative as its benefit in promoting regional long-term economic growth and tourism as well as connecting our citizens to the rest of Alberta and British Colombia.

Further, we invite those communities wanting to collaborate to contribute seed funding estimated at a shared total of $30,000 at the initial phase towards the professional completion of a formal plan and supporting documents for known grant funding. The estimated cost may be revised as we move to the next phases. If your municipality would like to be part of the core committee members to drive this initiative and contribute toward the seed funding, we would share the burden in building this seed funding to drive the project forward. We expect that this project will be almost completely funded by grants, as seen in the recent Peaks to Prairies initiative in Southern Alberta.

We would appreciate your response to indicate your support as a regional collaborator and your interest in being a core committee member by the middle of June due to the federal grant deadline of July 23, 2020. If interested, could you also provide a potential site location within your municipality.

Sincerely,

His Worship Kevin Zahara
Mayor, Town of Edson

CC: Brazeau County, City of Grande Prairie, Municipal District of Greenview, Municipality of Jasper, Parkland County, Town of Athabasca, Town of Barrhead, Town of Drayton Valley, Town of Fox Creek, Town of High Prairie, Town of Hinton, Town of Rocky Mountain House, Town of Slave Lake, Town of Westlock, Town of Whitecourt, Woodlands County, Yellowhead County

REQUEST FOR DECISION

SUBJECT:	**Operation of Shuttler Flats Provincial Recreation Area**				
SUBMISSION TO:	REGULAR COUNCIL MEETING	REVIEWED AND APPROVED FOR SUBMISSION			
MEETING DATE:	June 22, 2020	CAO:	DT	MANAGER:	KG
DEPARTMENT:	RECREATION	GM:	GM	PRESENTER:	DW
STRATEGIC PLAN:	Level of Service				

RELEVANT LEGISLATION:
Provincial - N/A

Council Bylaw/Policy - N/A

RECOMMENDED ACTION:
MOTION: That Council direct Administration to maintain the operation of Shuttler Flats Provincial Recreation Area (2-67-11-W6M) as a group use site.

BACKGROUND/PROPOSAL:
As per Motion 19.05.359, Administration has obtained a lease through Alberta Parks for Shuttler Flats Provincial Recreation Area (PRA). This site, located approximately 45 minutes Southwest of Grovedale, has traditionally been operated as a reservation only, group-use campsite.

The site currently features the following infrastructure:
- One fully enclosed shelter with fireplace;
- One half-shelter with woodstove;
- One double outhouse;
- Two parking lots;
- Walk in tent sites;
- Picnic tables;
- Garbage bin;
- A gate at entrance.
- A common fire area.

Administration believes that the current infrastructure of the site is established for group-usage. There is no individual campsites within the park, which would likely encourage conflict between users. Prior to the site operating effectively as a general campground, capital investment into the site would be required. Any improvement to the site will require approval by Alberta Parks. The planned divestment of the site will result in more leeway in regards to improvements in the future.

A community engagement session was held with the residents of Nose creek in August of 2019. Greenview's plan to take on Shuttler Flats PRA was discussed at this time and the residents provided a lot of feedback. An opposition to the site being open to the public in an unregulated manner was very clearly voiced.

Due to the current infrastructure, and stakeholder feedback, administration recommends that the site continue to be operated as a group use site.

BENEFITS OF THE RECOMMENDED ACTION:

1. The benefit of Council accepting the recommended action is that users of the site can continue utilizing the site in the manner they are accustomed to.
2. The benefit of Council accepting the recommended action is that there will be no financial implication outside of the approved operating costs of the site.
3. The benefit of Council accepting the recommended action is that it will help minimize vandalism to the site.

DISADVANTAGES OF THE RECOMMENDED ACTION:

1. The disadvantage of the recommended action of establishing the site as group usage is that users cannot sporadically decide to utilize Shuttler Flats PRA.
2. The disadvantage of the recommended action is that use of the site will be limited to one group of people at a time.

ALTERNATIVES CONSIDERED:

Alternative #1: That Council direct Administration to operate Shuttler Flats Provincial Recreation Area as a general campground, open to the public on a first come, first serve basis. This alternative is not recommended, as the current infrastructure of the site is not intended to serve this type of usage. Additionally, this alternative is not recommended as the residents of Nose Creek have voiced opposition to the site being open without restrictions.

FINANCIAL IMPLICATION:

The recommended motion would fall within the currently approved operating budget for Shuttler Flats PRA.

STAFFING IMPLICATION:

There are no new staffing implications to the recommended motion.

PUBLIC ENGAGEMENT LEVEL:

Greenview has adopted the IAP2 Framework for public consultation.

INCREASING LEVEL OF PUBLIC IMPACT

Inform

PUBLIC PARTICIPATION GOAL

Inform - To provide the public with balanced and objective information to assist them in understanding the problem, alternatives, opportunities and/or solutions.

PROMISE TO THE PUBLIC

Inform - We will keep you informed.

FOLLOW UP ACTIONS:

- Complete initial spring clean up of site.
- Develop a maintenance contract for the site.
- Open site for public use while following provincial guidelines related to COVID-19.

ATTACHMENT(S):

- Map of Shuttler Flats Provincial Recreation Area
- Photos of Shuttler Flats Provincial Recreation Area

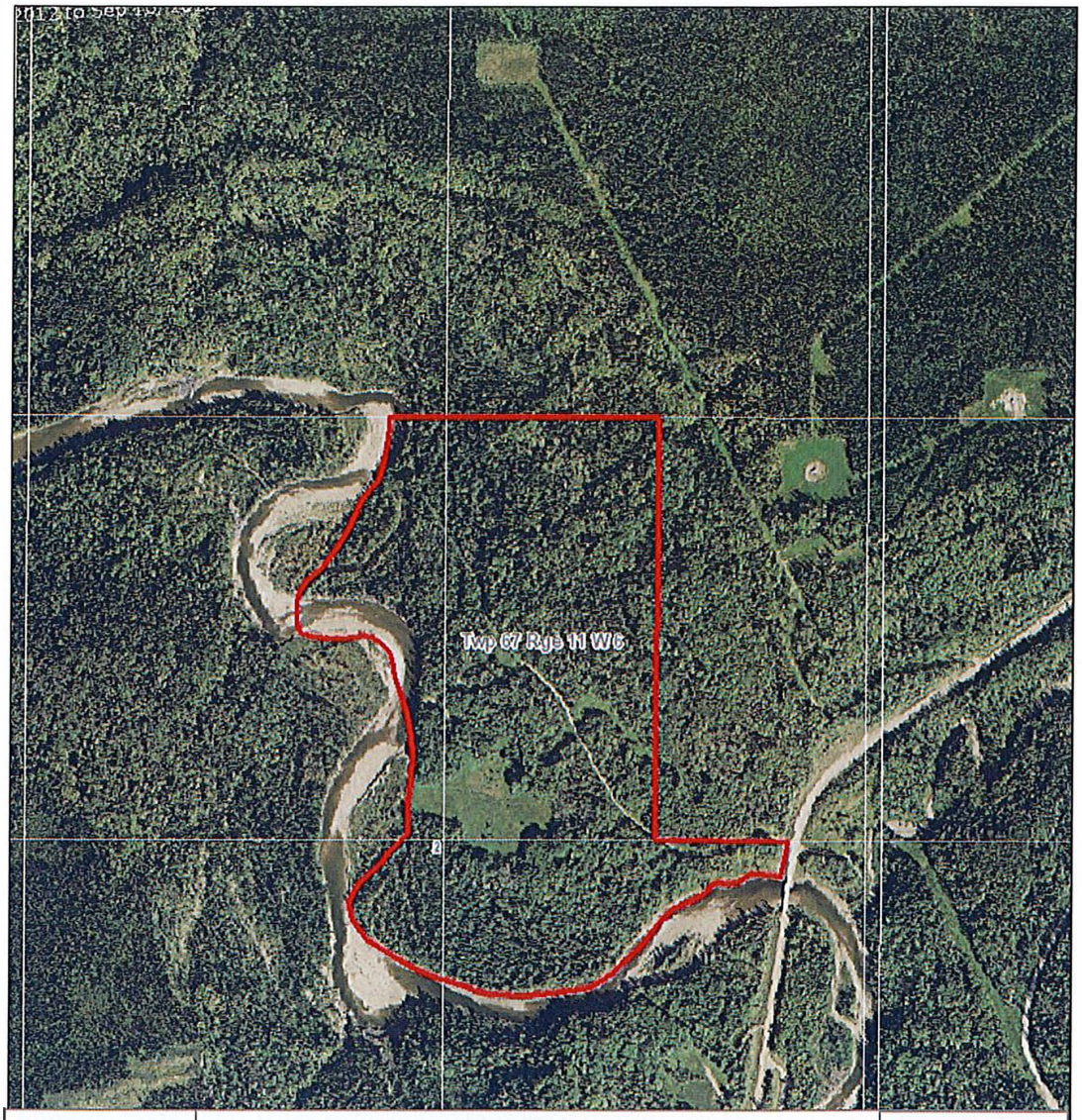

Area 59.96 ha 148.18 ac	**DEPARTMENT OF ENVIRONMENT AND PARKS** Parks Operations Division	Scale 1:10,000
O.C. Number N/A	PLAN SHOWING PML 190007 - M.D. of Greenview #16 WITHIN Shuttler Flats PRA and Incorporating DRS 1140 IN SECTION 2, TOWNSHIP 67, RANGE 11, WEST OF THE 6 MERIDIAN	Date December 13, 2019
Graphic File PML_190007.mxd		Drawn by: DJ
Remarks PML 190007-Shuttler Flats M.D. of Greenview	DISPOSITION AREA SHOWN THUS	Base feature digital map data modified by Resource Data Branch ESRD

Photos of Shuttler Flats Provincial Recreation Area

Fully enclosed shelter with fireplace and half-shelter with woodstove.

Photos of Shuttler Flats Provincial Recreation Area

Double outhouse and garbage bin.

Photos of Shuttler Flats Provincial Recreation Area

Parking lot #1

Photos of Shuttler Flats Provincial Recreation Area

Parking lot #2

Photos of Shuttler Flats Provincial Recreation Area

Common fire area.

Photos of Shuttler Flats Provincial Recreation Area

Access road.

REQUEST FOR DECISION

SUBJECT:	**2020 Scholarships**		
SUBMISSION TO:	REGULAR COUNCIL MEETING	REVIEWED AND APPROVED FOR SUBMISSION	
MEETING DATE:	June 22, 2020	CAO:	MANAGER:
DEPARTMENT:	COMMUNITY SERVICES	GM: GM	PRESENTER: TM/DM
STRATEGIC PLAN:	Quality of Life		

RELEVANT LEGISLATION:
Provincial (cite) – N/A

Council Bylaw/Policy (cite) – Policy #1032 – College, Trades and Apprenticeships Scholarships

RECOMMENDED ACTION:
MOTION: That Council authorize funding to the College, Trades and Apprenticeships Program scholarship recipients in the amounts indicated on the 2020 College, Trades and Apprenticeships Program Scholarship Recommendation Listing, with funds to come from the Community Service Budget.

MOTION: That Council authorize funding to the University 4 Year College Program scholarship recipients in the amounts indicated on the 2020 University 4 Year College Program Scholarship Recommendation Listing, with funds to come from the Community Service Budget.

BACKGROUND/PROPOSAL:
The College, Trades and Apprenticeships College Program Scholarship Policy was created in February of 2020 and superseded CO 18 (Sponsoring for a Veterinary Bursary) and CO 19 (Sponsoring for a Computer Technology Bursary). The Scholarship provides an opportunity for students enrolled in two (2) year college, trades and apprenticeship programs to apply for a $1,500.00 scholarship. The Scholarships policy defines an eligible student as one who meets the scholarship criteria established in the general principles for selection:

General Principles for selection include the following:

a. The student is a resident of Greenview;
b. The student has demonstrated financial need;
c. The student demonstrates community involvement, volunteering or extra-curricular activities;
d. Consideration may be given to scholarship recipients from the previous year.

Selection criteria for College Scholarships Applications also include:

e. The student has participated in a work experience or other work placement program (i.e. RAP, CTS programs, etc.) in High School;
f. Apprenticeship applicants must be enrolled in a registered apprenticeship program.
g. Grades are only used as a tie-breaker criteria, but was not utilized with this year's applications.

Selection Criteria for University Applications also include:

h. The applicants G.P.A. or course average in the last two semesters may be a factor for Council's consideration of the application. A minimum average of 60% will be considered.

Administration reviewed the applications to determine the student's financial need, community involvement, work experience or other work placement program, apprenticeship program, G.P.A. or course average, residency and applicable application status from the previous year. Administration evaluated the student as having a minimum course average of 60% as the indicator. Financial need was based on student loans and whether the student was self-financing.

Some applicants provided additional reference letters and additional anecdotes regarding why they needed or wanted this scholarship.

A scoring matrix was prepared to evaluate the student's applications. The names were removed to provide anonymity and to safeguard the personal information enclosed in the student applications. In accordance with the weight agreed to by Council, for the College scholarships, 40% was based on financial need, 30% on community involvement, and 30% based on work experience programs. For the University Scholarships, 40% based on financial need, 30% on community involvement and 30% on grades.

Administration has prepared a College, Trades and Apprenticeships Scholarship Recommendation Listing based on the applicants that met all the criteria. The 2020 scholarship requests that qualified as per the specifications in this policy presently total $7,500.00. However, Council has the alternative to revise or add to the listing up to the amount of funds allotted in the Budget ($15,000.00). If all the College, Trades and Apprenticeships College applicants receive scholarships, the total would be $13,500.00. Alternatively, Council may consider moving the additional $7,500.00 to the University, 4 Year College Scholarship for the 2020 calendar year as there were more applications received in this category. It was difficult choosing the top 10 for the $25,000.00 University, 4 Year College Scholarship, two of the applicants scored the same matrix total of 3.4, the application with recommendation letters was the one selected to break the tie. The additional $7,500.00 would provide 3 of the 4 qualifying applicants with scholarships, however there would be one remaining. Council does have the option to access additional funds from the allotted budget as an additional $10,000.00 is included in the budget over an above the amounts specified for the two policies ($15,000.00 and $25,000.00). The allotted 2020 Budget amount is $50,000.00.

BENEFITS OF THE RECOMMENDED ACTION:

1. The benefit of Council accepting the recommended motion is that Council will disperse the 2020 Scholarships fund to the applicants that met the established Scholarship criteria.

DISADVANTAGES OF THE RECOMMENDED ACTION:

1. There are no perceived disadvantages to the recommended motion.

ALTERNATIVES CONSIDERED:

Alternative #1: Council has the alternative to add to the listing up to the amount allotted in the budget.

FINANCIAL IMPLICATION:

Direct Costs: $7,500.00 2020 College, Trades and Apprenticeships Program
$25,000.00 2020 University, 4 Year College Scholarship Program

STAFFING IMPLICATION:

There are no staffing implications to the recommended motion.

PUBLIC ENGAGEMENT LEVEL:

Greenview has adopted the IAP2 Framework for public consultation.

INCREASING LEVEL OF PUBLIC IMPACT

Inform

PUBLIC PARTICIPATION GOAL

Inform - To provide the public with balanced and objective information to assist them in understanding the problem, alternatives, opportunities and/or solutions.

PROMISE TO THE PUBLIC

Inform - We will keep you informed.

FOLLOW UP ACTIONS:

Administration will disperse the College, Trades and Apprenticeship scholarships and the University, 4 Year College Scholarships in accordance with Council's decision.

ATTACHMENT(S):

- Checklist Scoring Matrix
- 2020 College, Trades and Apprenticeships Scholarship Recommendations
- 2020 University, 4 Year College Scholarship Recommendations

COLLEGE	GV Resident y/n	Financial Need /4 x0.4 (Weight 40%)	Community Involvement /4 x 0.3 (Weight 30%)	Work Experience /4 x 0.3 (Weight 30%)	Grades /4	Tiebreaker	Score /4	Notes	
(A)	Y	4	3	1	3.8		3.4	No RAP/Work Experience but did work and has good grades	*
(B)	Y	4	2	4	3.6		3.4	meets all criteria	*
(C)	Y	4	4	4	3.8		4	Did not provide proof of academic achievement as required	
(D)	Y	3	3	4	3.9		3.3	Meets all criteria	*
(E)	Y	4	4	1	4		3.1	Meets all scholarship criteria - did not do a formal work experience in HS	*
(F)	N	4	1	1	NA			Not a resident of Greenview	
(G)	N	3	4	1	78% / 3.0			Not a resident of Greenview	
(H)	Y	4	4	N/A			4	Has been out of high school for some time and work experience does not apply. Did a practicum with FCSS	*
(I)	Y	3	1	4	2.7		2.7	Did not demonstrate community involvement	

UNIVERSITY	GV Resident y/n	Financial Need /4 x0.4 (Weight 40%)	Community Involvement /4 x 0.3 (Weight 30%)	Work Experience N/A	Grades /4 x 0.3 (Weight 30%)	Score /4	Notes	
(J)	Y	4	4	N/A	3.8	3.9	Did not provide proof of academic achievement as required	
(K)	Y	4	3	N/A	3.4	3.5	meets all the criteria	*
(L)	Y	4	2	N/A	3.2	3.1	Did not provide proof of academic achievement as required	
(M)	Y	3	4	N/A	3.3	3.4	meets all the criteria. Student included two reference letters.	*
(N)	Y	4	4	N/A	4	4	meets all the criteria	*
(O)	Y	4	4	N/A	4	4	received last year	*
(P)	Y	4	4	N/A	3.4	3.8	meets all the criteria	*
(Q)	Y	2	2	N/A	3.9	2.6	Meets all criteria, financial need indeterminable	*
(R)	Y	2	2	N/A	1.2	1.8	Did not provide proof of academic achievement as required	
(S)	Y	4	4	N/A	3.9	3.9	Did not provide proof of academic achievement as required	
(T)	Y	4	4	N/A	3.9	3.9	meets all the criteria	*
(U)	N	2	4	N/A	4	3.2	Not a resident of Greenview	
(V)	Y	4	4	N/A	3.9	3.9	Meets all criteria	*
(W)	N	4	2	N/A	3.3	3.2	Not a resident of Greenview	
(X)	Y	2	4	N/A	3.8	3.1	Did not provide proof of academic achievement as required	
(Y)	Y	3	4	N/A	2.7	3.2	meets all the criteria	*
(Z)	Y	4	4	N/A	3.7	3.9	meets all the criteria	*
(A2)	N	3	4	N/A	3.3	3.4	Not a resident of Greenview	
(B2)	Y	3	3	N/A	3.7	3.2	meets all the criteria	*
(C2)	Y	4	4	N/A	4	4	meets all the criteria	*
(D2)	Y	3	4	N/A	3.3	3.4	meets all the criteria	*
(E2)	Y	4	4	N/A	3.7	3.9	meets all the criteria	*

COLLEGE, TRADES AND APPRENTICESHIPS 2020 SCHOLARSHIP RECOMMENDATIONS

Name:	Eligible Amount:	Administrative Notes:
Ehenholz, Sydney	$1,500.00	This applicant met all the general principles for selection and attained a high academic achievement level.
Elzinga, Kierra	$1,500.00	This applicant met all the general principles for selection and attained a high academic achievement level.
Kobe, Cheyanne	$1,500.00	This applicant met all the general principles for selection and attained a high academic achievement level.
Mayer, Jared	$1,500.00	This applicant met all the general principles for selection and attained a high academic achievement level.
McLeod, Jarrett	$1,500.00	This applicant met all the general principles for selection and attained a high academic achievement level.
Total:	$7,500.00	

UNIVERSITY 4 YEAR COLLEGE 2020 SCHOLARSHIP RECOMMENDATIONS

Name:	Eligible Amount:	Administrative Notes:
1. Bock, Kayla	$2,500.00	This applicant met all the general principles for selection and attained a high academic achievement level. **Student participated in community events. Financial need was indicated by self-finance, student loans and pandemic hindering summer work plan. Student does not have parent financial assistance. Resident: Grande Cache**
19. Busch, Allyson	$2,500.00	This applicant met all the general principles for selection and attained a high academic achievement level. **Demonstrated financial need: student or other financial loans, applied for scholarships and is self-financed. COVID-19 hindered work plan. Extensive community involvement, including Grande Cache Junior Member of the Fire Department. Resident: Grande Cache**
3. Cornelsen, Lacey	$2,500.00	This applicant met all the general principles for selection and attained a high academic achievement level. **Student demonstrated financial need with self-financed and student or other financial loans. COVID-19 may effect ability to acquire summer work. Student completed all of the portions of the application. Resident: Valleyview Area (Greenview)**
4. Cornelsen, Raina	$2,500.00	This applicant met all the general principles for selection and attained a high academic achievement level. **Student demonstrated financial need with indication of student loans. COVID-19 may effect ability to acquire summer work. Student had high academic achievement. Student completed all of the portions of the application. Resident: Valleyview Area (Greenview)**

UNIVERSITY 4 YEAR COLLEGE 2020 SCHOLARSHIP RECOMMENDATIONS

Name:	Eligible Amount:	Administrative Notes:
10. Edwards, Allison	$2,500.00	This applicant met all the general principles for selection and attained a high academic achievement level. **A recommendation letter was included with the application. Student is self-financed and has student or other financial loans. Student does not have parent financial assistance. COVID has hindered summer employment plans. Resident: Grovedale**
15. Engler, Emalee	$2,500.00	This applicant met all the general principles for selection and attained a high academic achievement level**. Numerous community involvement, one that includes being a volunteer firefighter on the Grovedale Fire Department. Student is self-financed and indicated that a student loan may be needed. Student completed the application in full. Resident: Grovedale**
7. Fourie, Lizaan	$2,500.00	This applicant met all the general principles for selection and attained a high academic achievement level. **Extensive community involvement and will be applying for a student loan. Student indicated parent assistance. Student included two reference letters with the application. Resident: Grande Cache**
5. Nguyen, Jessica	$2,500.00	This applicant met all the general principles for selection and attained a high academic achievement level. **Financial need was indicated by student loans and pandemic hindering summer work plan. Student does have parent or family financial assistance available. Student was a Greenview scholarship recipient in 2019. Resident: Grande Cache**

UNIVERSITY 4 YEAR COLLEGE 2020 SCHOLARSHIP RECOMMENDATIONS

Name:	Eligible Amount:	Administrative Notes:
22. O'Reilly, Mackenzie	$2,500.00	**This applicant met all the general principles for selection and attained a high academic achievement level with grades in the 90 percentage level. Financial need demonstrated with student or other financial loans. Extensive list of community service participation. Resident: Grande Cache**
13. Williams, Tara	$2,500.00	This applicant met all the general principles for selection and attained a high academic achievement level. **This student is self-financed, did not apply for other scholarships and does not have student loans.**
All Total:	**$25,000.00**	

REQUEST FOR DECISION

SUBJECT:	**Tax Recovery – Public Sale of Land**				
SUBMISSION TO:	REGULAR COUNCIL MEETING	REVIEWED AND APPROVED FOR SUBMISSION			
MEETING DATE:	June 22, 2020	CAO:	DT	MANAGER:	DD
DEPARTMENT:	CORPORATE SERVICES	GM:	AN	PRESENTER:	MJ
STRATEGIC PLAN:	Level of Service				

RELEVANT LEGISLATION:

Provincial (cite) – In accordance with Section 418, 419 and 428(1) of *Municipal Government Act*

Council Bylaw/Policy (cite) – AD 27

RECOMMENDED ACTION:

MOTION: That Council set the reserve bid terms and conditions that apply to the public sale of land as per the attached advertisement;

Roll #	Legal Description	Reserve Bid
Roll #190954	NW-17-74-26-W5	$290,000.
Roll #292674	Plan 882347 Lot A SE-5-70-22-W5	$270,000.
Roll #309501	Plan 0424571 Block 1 Lot 1 SW-4-70-26-W5	$85,000.
Roll #311107	Plan 9825735 Block 1 Lot 5 SE-27-69-8-W6	$120,000.
Roll #318225	Plan 1623195 Block 1 Lot 4 SE-11-72-2-W6	$370,000.
Roll #36846	SE-5-73-20-W5	$420,000.
Roll #173000	Plan 1436RS Block 1 Lot 8	$108,000.
Roll #261000	Plan 1436RS Block 8 Lot 17	$95,000.
Roll #576000	Plan 2835RS Block 17 Lot 12	$110,000.
Roll #489000	Plan 2769RS Block 18 Lot 28	$107,000.

BACKGROUND/PROPOSAL:

The Tax Recovery process is the last resort mechanism Municipalities use to collect outstanding property taxes and is a strictly legislated process. When property taxes remain unpaid for more than one year, a Tax Notification Caveat is placed on the Land Title and notification is sent to the land owner and other interested parties as shown on the title advising them of the Caveat. If the property tax arrears remain unpaid on March 31st of the following year, the Municipality may sell the property by Public Auction. The municipality has one year from April 1st to place the parcel for sale by public auction.

Council is required to set a reserve bit that is as close as reasonably possible to the market value of the parcel. Administration requested an "Opinion of Value", from Accurate Assessment Group Ltd. & Power's & Associates. Copies of the "Opinion of Value" are attached for Council's information.

After Council has made the decision to proceed with selling the property by Public Auction, a notice is sent to the property owner(s) advising them of the Public Auction date and the amount of outstanding property taxes that must be paid prior to the start of the auction, to stop the sale of their property by Public Auction. If the outstanding arrears are not paid, the Public Auction proceeds.

If any property is sold by Public Auction, the municipality is permitted to charge an administration fee of 5% of the sale price to the tax roll. This amount plus the tax arrears and advertising costs are collected from the sale price. The remaining balance may be paid to the previous land owner if the Municipality is satisfied there are no debts secured by an encumbrance on the Title. If the Municipality is not satisfied that there are no other debts that are secured by an encumbrance on Title, the municipality must notify the previous owner that an application may be made under section 428(1) to recover all or part of the money.

BENEFITS OF THE RECOMMENDED ACTION:

1. A benefit of the recommended action is that the required advertising deadline will be met and the Public Auction will go ahead as planned.
2. Another benefit of the recommended action is that Administration will have received Council's direction on how to proceed regarding the value to be placed on the properties.

DISADVANTAGES OF THE RECOMMENDED ACTION:

1. There are no perceived disadvantages to the recommended motion.

ALTERNATIVES CONSIDERED:

Alternative #1: Council has the alternative not to accept the recommendation from Administration. Administration does not recommend this option as the process will be delayed, another Opinion of Value would be requested from Accurate Assessment Group Ltd. & Powers & Associates which would likely have the same results and the advertising deadline will not be met.

FINANCIAL IMPLICATION:

There are no future or direct costs resulting from the recommended motion, as all cost will be added to the property tax rolls for the affected properties.

STAFFING IMPLICATION:

There are no staffing implications associated with the recommended action, since tax recovery sales are considered in the annual work plan.

PUBLIC ENGAGEMENT LEVEL:

Greenview has adopted the IAP2 Framework for public consultation.

INCREASING LEVEL OF PUBLIC IMPACT

Inform

PUBLIC PARTICIPATION GOAL

Inform - To provide the public with balanced and objective information to assist them in understanding the problem, alternatives, opportunities and/or solutions.

PROMISE TO THE PUBLIC

Inform - We will keep you informed.

FOLLOW UP ACTIONS:

The required advertisements will be placed

ATTACHMENT(S):

- Advertisement
- Opinion of Value
- Assessment Summary Report for each property
- Council Policy AD 27
- MGA Sections 418, 419 & 428(1)

PUBLIC SALE OF LAND
MUNICIPAL GOVERNMENT ACT
DIVISION 8
RECOVERY OF TAXES RELATED TO LAND
MUNICIPAL DISTRICT OF GREENVIEW NO. 16

Notice is hereby given that under the provisions of the *Municipal Government Act* the Municipal District of Greenview No. 16 will offer for sale, by public auction, in the Council Chambers of the Municipal District of Greenview No. 16 Administration Building, 4806 – 36 Avenue, Valleyview, Alberta, on Wednesday, September 16, 2020 at 1:00 P.M. Mountain Standard Time, the following lands:

LEGAL	PLAN	BLOCK	LOT	C OF T	RESERVE BID
NW-17-74-26-W5				**982184960**	**$290,000**
SE-5-70-22-W5	**8822347**		**A**	**112398528**	**$270,000**
SW-4-70-26-W5	**0424571**	**1**	**1**	**132163695**	**$85,000**
SE-27-69-8-W6	**9825735**	**1**	**5**	**142103398**	**$120,000**
SE-11-72-2-W6	**1623195**	**1**	**4**	**162243177**	**$370,000**
SE-5-73-20-W5				**142087406**	**$420,000**
	1436RS	**6**	**8**	**022473000**	**$108,000**
	1436RS	**8**	**17**	**062274114**	**$95,000**
	2835RS	**17**	**12**	**142002716**	**$110,000**
	2769RS	**18**	**28**	**922156372**	**$107,000**

Each parcel will be offered for sale subject to a reserve bid and to the reservations and conditions contained in the existing Certificate of Title.

These properties are being offered for sale on an “as is, where is” basis, and the Municipal District of Greenview No. 16 makes no representation and gives no warranty whatsoever as to the adequacy of services, soil conditions, land use districting, building and development conditions, absence or presence of environmental contamination, or the developability of the subject land for any intended use by the Purchaser. No bid will be accepted where the bidder attempts to attach conditions precedent to the sale of any parcel. No terms or conditions of sale will be considered other than those specified by the Municipal District of Greenview No. 16. No further information is available at the public auction regarding the lands to be sold.

The Municipal District of Greenview No. 16 may, after the public auction, become the owner of any parcel of land that is not sold at the public auction.

TERMS: 10% down payment at public auction; balance within 30 days of the date of the Public Auction. All payments must be made by Cash or Certified Cheque.

Redemption may be effected by payment of all arrears of taxes and costs at any time prior to the sale.

Dated at Valleyview, Alberta July 31, 2020

DENISE THOMPSON, CHIEF ADMINISTRATIVE OFFICER

ACCURATE ASSESSMENT GROUP LTD.

At AAG, our purpose is to continuously seek improvement
and earn the role of Trusted Advisor.

May 12, 2020

Attention: Marilyn Jensen

As per your request of May 5, 2020 regarding tax recovery properties, I have prepared an *opinion of value* on the subject properties. A visual drive by inspection was conducted in the past on these properties as part of the regularly scheduled assessment re-inspection Cycle. Assuming the condition of the property reflects normal condition and assuming there are not any problems or abnormalities, structural, physical, or otherwise, the following figures represent an *opinion of value* as of May 12, 2020. Any timber, mineral, riparian or commodity value(s) or easement revenue(s) that may exist on the subject properties have not been factored into their specific valuation.

Roll 190954 – NW-17-74-26-W5	Opinion = $290,000
Roll 292674 – Plan 8822347 Lot A, SE-5-70-22-W5	Opinion = $270,000
Roll 309501 – Plan 0424571 Block 1 Lot 1, SW-4-70-26-W5	Opinion = $85,000
Roll 311107 – Plan 9825735 Block 1 Lot 5, SE-27-69-8-W6	Opinion = $120,000
Roll 318225 – Plan 1623195 Block 1 Lot 4, SE-11-72-2-W6	Opinion = $370,000
Roll 36846 – SE-5-73-20-W5	Opinion = $420,000

Details regarding the valuation process and criteria/comparables used are available upon request.

Sincerely,

Troy Birtles, AMAA
Assessment Coordinator
Accurate Assessment Group

POWERS & ASSOCIATES APPRAISAL SERVICES INC.

POWERS & ASSOCIATES
Valuation • Assessment • Advisory

Town of Grande Cache Date: June 01, 2020
RE: Public Auction for Tax Recovery

The following represents my current estimate of market value for public auction reserve bids located within the MD of Greenview in the Hamlet of Grande Cache as of June 01, 2020.

ROLL	PLAN	Block/Unit	Lot	ASSESSMENT	RESERVE BID AMOUNT
173000	1436RS	6	8	$155,000	$108,000
261000	1436RS	8	17	$137,000	$95,000
576000	2835RS	17	12	$158,000	$110,000
489000	2769RS	18	28	$154,000	$107,000

The above has **not** been prepared in accordance with CUSPAP or USPAP and should not be relied upon by any person or persons other then the intended user noted in the letterhead. The estimates of value contained herein have been discounted to reflect the nature of auction sales where properties are generally sold site-unseen and as-is, where-is for the purpose of establishing an estimate of value for reserve bid purposes only. Use for any other purpose or by any other entity is expressly denied.

Warren Powers, AMAA
Assessor
MD of Greenview (Hamlet of Grande Cache)

PO Box 3096 • Beaumont, Alberta • T4X 1K8
Phone: 780.439.7227 • Fax: 780.439.7221 • Toll Free: 1.877.867.9079
Email: admin@powersandassociates.ca

Town of Grande Cache

Assessment Summary

Year of General Assessment: 2019

Roll: 173000
Legal: 1436RS 6 8
Address: 10309 98 AVENUE

Land Area: 780.4 Sq. Meters
Subdivision:
Zoning: R-1B Residential (B)
Actual Use: Improved Residential / Single Family Unit- fee simple

Market Land Valuation	Site Area: 780.4 Sq. Meters	Asmt	Code	Value
		2	100%	34,000

Improvement Valuation		Floor Area	Built	Asmt	Code	Value
1 Storey & Basement	SFD - After 1940	1,088 Sq Feet	1969	2	100%	115,000
Detached	Garage	385 Sq Feet	1969	2	100%	6,000

Assessment Totals

Tax Status	Code	Description	Assessment
T	2	Residential Improved	155,000
		Grand Totals For 2019	**155,000**

Town of Grande Cache

Assessment Summary

Year of General Assessment: 2019

Roll: 261000
Legal: 1436RS 8 17
Address: 9702 101 STREET

Land Area: 1,080.4 Sq. Meters
Subdivision:
Zoning: R-1B Residential (B)
Actual Use: Improved Residential / Single Family Unit- fee simple

Market Land Valuation	Site Area: 1,080.4 Sq. Meters	Asmt	Code	Value
		2	100%	41,000

Improvement Valuation		Floor Area	Built	Asmt	Code	Value
Split Entry	SFD - After 1940	1,057 Sq Feet	1969	2	100%	96,000

Assessment Totals

Tax Status	Code	Description	Assessment
T	2	Residential Improved	137,000
		Grand Totals For 2019	**137,000**

Town of Grande Cache

Assessment Summary

Year of General Assessment: 2019

Roll: 576000
Legal: 2835RS 17 12
Address: 9822 110 STREET

Land Area: 744.1 Sq. Meters
Subdivision:
Zoning: R-1B Residential (B)
Actual Use: Improved Residential / Single Family Unit- fee simple

Market Land Valuation	Site Area: 744.1 Sq. Meters	Asmt	Code	Value
		2	100%	33,000

Improvement Valuation		Floor Area	Built	Asmt	Code	Value
1 Storey & Basement	SFD - After 1940	960 Sq Feet	1970	2	100%	115,000
Attached	Garage	552 Sq Feet	1970	2	100%	10,000

Assessment Totals

Tax Status	Code	Description	Assessment
T	2	Residential Improved	158,000
		Grand Totals For 2019	**158,000**

Town of Grande Cache

Assessment Summary

Year of General Assessment: 2019

Roll: 489000
Legal: 2769RS 18 28
Address: 10822 98 AVENUE

Land Area: 793.9 Sq. Meters
Subdivision:
Zoning: R-1B Residential (B)
Actual Use: Improved Residential / Single Family Unit- fee simple

Market Land Valuation	Site Area: 793.9 Sq. Meters	Asmt	Code	Value
		2	100%	34,000

Improvement Valuation		Floor Area	Built	Asmt	Code	Value
Split Entry	SFD - After 1940	1,075 Sq Feet	1969	2	100%	120,000

Assessment Totals

Tax Status	Code	Description	Assessment
T	2	Residential Improved	154,000
		Grand Totals For 2019	**154,000**

Assessment Summary

Year of General Assessment: 2019

Roll: 36846
Legal: SE-5-73-20-5
Address:

Land Area: 155.18 Acres
Subdivision:
Zoning: Agriculture One
Actual Use: Improved Residential / Designated Manufactured Home / Manufactured Home out MHC

Market Land Valuation

Site Area: 3.00 Acres

Asmt	Code	Value
110	90%	53,960
200	10%	5,990

Farmland Valuation

Agroclimatic Zone: 21 2H-PR

Asmt	Code	Value
300	100%	10,870

Soil Group	Area	Rating
62 GL	67.00 Acres	34.0%
42 DG	12.00 Acres	23.0%
80 Pasture	20.00 Acres	33.0%
80 Pasture	53.18 Acres	6.0%

Total Area: **152.18 Acres**

Improvement Valuation

		Floor Area	Built	Asmt	Code	Value
1 Storey Basementless	SFD - After 1970	2,400 Sq Feet	2000	110	100%	284,790

Marshall & Swift

		Area (Ft2)	Built	Asmt	Code	Value
Main Level Structure	12x48 Relocatable Office	576 Sq Feet	1995	110	100%	34,570

Assessment Totals

Tax Status	Code	Description	Assessment
T	110	FARM RES IMPR/SITE	362,450
	200	*COMM IMPR/SITE	5,990
	300	FARMLAND	10,870
		Totals For 2019 Taxable	**379,310**
E	900	RURAL RES EXEMPTION	10,870
		Grand Totals For 2019	**390,180**

Town of Grande Cache

Assessment Summary

Year of General Assessment: 2019

Roll: 173000
Legal: 1436RS 6 8
Address: 10309 98 AVENUE

Land Area: 780.4 Sq. Meters
Subdivision:
Zoning: R-1B Residential (B)
Actual Use: Improved Residential / Single Family Unit- fee simple

Market Land Valuation

Site Area: 780.4 Sq. Meters

Asmt	Code	Value
2	100%	34,000

Improvement Valuation

		Floor Area	Built	Asmt	Code	Value
1 Storey & Basement	SFD - After 1940	1,088 Sq Feet	1969	2	100%	115,000
Detached	Garage	385 Sq Feet	1969	2	100%	6,000

Assessment Totals

Tax Status	Code	Description	Assessment
T	2	Residential Improved	155,000
		Grand Totals For 2019	155,000

Assessment Summary

Year of General Assessment: 2019

Roll: **190954**
Legal: **NW-17-74-26-5**
Address:

Land Area: 159.00 Acres
Subdivision:
Zoning: Agriculture One
Actual Use: Improved Residential / Designated Manufactured Home / Manufactured Home out MHC

Market Land Valuation

Site Area: 3.00 Acres

Asmt	Code	Value
110	100%	80,800

Farmland Valuation

Agroclimatic Zone: 21 2H-PR

Asmt	Code	Value
300	100%	6,620

Soil Group	Area	Rating
62 GL	49.19 Acres	32.9%
42 DG	8.68 Acres	23.0%
80 Pasture	79.28 Acres	5.0%
80 Pasture	18.85 Acres	2.0%

Total Area: **156.00 Acres**

Improvement Valuation

		Floor Area	Built	Asmt	Code	Value
Foundation - Basementless	Manufactured Home - Single	1,216 Sq Feet	2005	110	100%	95,980

Assessment Totals

Tax Status	Code	Description	Assessment
T	110	FARM RES IMPR/SITE	170,160
	300	FARMLAND	6,620
		Totals For 2019 Taxable	**176,780**
E	900	RURAL RES EXEMPTION	6,620
		Grand Totals For 2019	**183,400**

Town of Grande Cache

Assessment Summary

Year of General Assessment: 2019

Roll: 261000
Legal: 1436RS 8 17
Address: 9702 101 STREET

Land Area: 1,080.4 Sq. Meters
Subdivision:
Zoning: R-1B Residential (B)
Actual Use: Improved Residential / Single Family Unit- fee simple

Market Land Valuation

Site Area: 1,080.4 Sq. Meters

Asmt	Code	Value
2	100%	41,000

Improvement Valuation

		Floor Area	Built	Asmt	Code	Value
Split Entry	SFD - After 1940	1,057 Sq Feet	1969	2	100%	96,000

Assessment Totals

Tax Status	Code	Description	Assessment
T	2	Residential Improved	137,000
		Grand Totals For 2019	137,000

Assessment Summary

Year of General Assessment: 2019

Roll: **292674**
Legal: **8822347 A SE-5-70-22-5**
Address:

Land Area: 8.28 Acres
Subdivision:
Zoning: Agriculture One
Actual Use: Improved Residential / Designated Manufactured Home / Manufactured Home out MHC

Market Land Valuation

Site Area: 8.28 Acres

Asmt	Code	Value
100	100%	97,710

Improvement Valuation

		Floor Area	Built	Asmt	Code	Value
Foundation - Basementless	SFD - After 1970	1,344 Sq Feet	1995	100	100%	174,980
Detached	Garage	727 Sq Feet	1997	100	100%	28,310

Assessment Totals

Tax Status	Code	Description	Assessment
T	100	RES IMPR/SITE	301,000
		Grand Totals For 2019	**301,000**

Assessment Summary

Year of General Assessment: 2019

Roll: **309501**
Legal: **0424571 1 1 SW-4-70-26-5**
Address:

Land Area: 10.25 Acres
Subdivision:
Zoning: Agriculture One
Actual Use: Improved Residential / Single Family Unit- fee simple

Market Land Valuation

Site Area: 10.25 Acres

Asmt	Code	Value
100	100%	72,690

Improvement Valuation

		Floor Area	Built	Asmt	Code	Value
1 Storey Basementless	SFD - All Ages	1,379 Sq Feet	1960	100	100%	22,460

Assessment Totals

Tax Status	Code	Description	Assessment
T	100	RES IMPR/SITE	95,150
		Grand Totals For 2019	**95,150**

Assessment Summary

Year of General Assessment: 2019

Roll: **311107**
Legal: **9825735 1 5 SE-27-69-8-6**
Address:

Land Area: 9.34 Acres
Subdivision: Aspen Grove
Zoning: Country Residential One
Actual Use: Improved Residential / Designated Manufactured Home / Manufactured Home out MHC

Market Land Valuation

Site Area: 9.34 Acres

Asmt	Code	Value
100	100%	50,100

Improvement Valuation

		Floor Area	Built	Asmt	Code	Value
Foundationless	Manufactured Home - Single	945 Sq Feet	1995	100	100%	83,860

Assessment Totals

Tax Status	Code	Description	Assessment
T	100	RES IMPR/SITE	133,960
		Grand Totals For 2019	**133,960**

Assessment Summary

Year of General Assessment: 2019

Roll: **318225**
Legal: **1623195 1 4 SE-11-72-2-6**
Address:

Land Area: 9.86 Acres
Subdivision:
Zoning: Country Residential Two
Actual Use: Improved Residential / Single Family Unit- fee simple

Market Land Valuation

Site Area: 9.86 Acres

Asmt	Code	Value
100	100%	107,370

Improvement Valuation

		Floor Area	Built	Asmt	Code	Value
1 Storey & Basement	SFD - After 1970	2,091 Sq Feet	2016	100	100%	263,740
Attached	Garage	1,121 Sq Feet	2016	100	100%	42,410

Assessment Totals

Tax Status	Code	Description	Assessment
T	100	RES IMPR/SITE	413,520
		Grand Totals For 2019	**413,520**

Town of Grande Cache

Assessment Summary

Year of General Assessment: 2019

Roll: 489000
Legal: 2769RS 18 28
Address: 10822 98 AVENUE

Land Area: 793.9 Sq. Meters
Subdivision:
Zoning: R-1B Residential (B)
Actual Use: Improved Residential / Single Family Unit- fee simple

Market Land Valuation

Site Area: 793.9 Sq. Meters

Asmt	Code	Value
2	100%	34,000

Improvement Valuation

		Floor Area	Built	Asmt	Code	Value
Split Entry	SFD - After 1940	1,075 Sq Feet	1969	2	100%	120,000

Assessment Totals

Tax Status	Code	Description	Assessment
T	2	Residential Improved	154,000
		Grand Totals For 2019	154,000

Town of Grande Cache

Assessment Summary

Year of General Assessment: 2019

Roll: 576000
Legal: 2835RS 17 12
Address: 9822 110 STREET

Land Area: 744.1 Sq. Meters
Subdivision:
Zoning: R-1B Residential (B)
Actual Use: Improved Residential / Single Family Unit- fee simple

Market Land Valuation

Site Area: 744.1 Sq. Meters

Asmt	Code	Value
2	100%	33,000

Improvement Valuation

		Floor Area	Built	Asmt	Code	Value
1 Storey & Basement	SFD - After 1940	960 Sq Feet	1970	2	100%	115,000
Attached	Garage	552 Sq Feet	1970	2	100%	10,000

Assessment Totals

Tax Status	Code	Description	Assessment
T	2	Residential Improved	158,000
		Grand Totals For 2019	158,000

POLICY NUMBER: AD 27

POLICY TITLE: TAX RECOVERY	**Page 1 of 2**
Date Adopted by Council / Motion Number:	**11.10.561**

PURPOSE:

To establish guidelines on how tax forfeited lands will be sold or made available for taxation again.

POLICY:

The M.D. has established a method in which Council can introduce tax forfeited land to the marketplace.

1. No parcel will be removed from the Tax Sale List unless all taxes, penalties and costs incurred by the M.D. in the Tax Recovery Process are paid prior to the sale.

2. In accordance with the provisions of the Municipal Government Act, Chapter M-26.1, the M.D. may become the owner of any land that is offered, but not sold, at the Tax Recovery Sale.

3. If the M.D. exercises its option to become the owner of the land, the M.D. will not sell the property until one year after the date of the Tax Recovery Auction unless the prospective buyer meets the reserve bid price set at the original sale.

4. If, in the opinion of Council, the sale of tax forfeited land will cause hardship to an existing occupant, the Council may lease all or a portion of the parcel to the occupant so long as the revenue generated exceeds what would be generated by taxation, so as to make partial payment on arrears.

5. The amount of lease fees will be set by Council, and the occupant is not permitted to assign or sub-let his/her interest in the parcel.

6. Council will adopt a reserve price for all lands which are to be offered for sale at the Tax Recovery Auction. This reserve price will be advertised in a local newspaper. The reserve bid adopted by Council for the Tax Recovery Auction will also apply to properties unsold at the Tax Recovery Auction, whether they are to be sold by private sale or by public tender.

7. Council will determine the method in which the reserve price, letter of opinion, or opinion of value will be set and whether it is to be performed by an appraiser, realtor, or assessor.

8. In the event a parcel is sold and there remains excess revenue after taxes, an administration charge will be applied. The administration charge will include, but is not limited to, the following:
   a) Costs of advertising, both in the local papers and the Alberta Gazette;
   b) Costs to prepare a reserve bid;
   c) Costs paid to the Registrar of Land Titles for tax arrears notifications and preparation of a Tax Arrears List; and
   d) An administration fee of 5% of the amount paid for the parcel.

9. In all respects, Council will conduct Tax Recovery Auctions in accordance with Division 8, Recovery of Taxes Related to Land, of the Municipal Government Act, Chapter M-26.1.

10. Tax Recovery property sold will adhere to the following terms:

    Public Auction:
    For agricultural land - 10% down at public auction; balance at finalization.
    For subdivided lots - 10% down at public auction; balance at finalization.

    Public Tenders: - 10% of bid to accompany tender.
    The MD will consider time sale not to exceed one year at 8% interest on outstanding balance with 12% charged on arrears.

    Direct Sales: - 10% of bid to accompany tender.
    The MD will consider time sale not to exceed one year at 8% interest on outstanding balance with 12% charged on arrears.

    LAND TITLE FEES: The M.D. will collect Land Title Office fees over and above the purchase price from purchasers at final payment, at a rate charged for Land Title fees, plus one dollar ($1) for each $1,000 market value or portion thereof.

11. If a Tax Recovery property remains unsold after one year from the Tax Recover sale, Council may allow for further appraisals or offers to be considered in accordance with the M.G.A.

(Original signed copy on file) _____
REEVE C.A.O.

advising the person of the municipality's intention to proceed under subsection (2.1).

(2.3) Where a parcel of land described in section 304(1)(c) is held under a lease, licence or permit from the Crown in right of Alberta,

(a) the Crown must, on a quarterly basis, notify the municipality in which the parcel is located of any changes in the status of the lease, licence or permit, as the case may be, and

(b) the municipality must send to the Crown that portion of the tax arrears list showing the parcels of land described in section 304(1)(c) that are held by the Crown.

(3) This section does not prevent the municipality from exercising any other right it has to collect the tax arrears.

RSA 2000 cM-26 s416;2015 c8 s52

Warning of sale

417(1) Not later than the August 1 following receipt of a copy of the tax arrears list, the Registrar must, in respect of each parcel of land shown on the tax arrears list, send a notice to

(a) the owner of the parcel of land,

(b) any person who has an interest in the parcel that is evidenced by a caveat registered by the Registrar, and

(c) each encumbrancee shown on the certificate of title for the parcel.

(2) The notice must state

(a) that if the tax arrears in respect of the parcel of land are not paid before March 31 in the next year, the municipality will offer the parcel for sale at a public auction, and

(b) that the municipality may become the owner of the parcel after the public auction if the parcel is not sold at the public auction.

(3) The notice must be sent to the address shown on the records of the Land Titles Office for each person referred to in subsection (1).

1994 cM-26.1 s417;1995 c24 s61

Offer of parcel for sale

418(1) Each municipality must offer for sale at a public auction any parcel of land shown on its tax arrears list if the tax arrears are not paid.

(2) Unless subsection (4) applies, the public auction must be held in the period beginning on the date referred to in section 417(2)(a) and ending on March 31 of the year immediately following that date.

(3) Subsection (1) does not apply to a parcel in respect of which the municipality has started an action under section 411(2) to recover the tax arrears before the date of the public auction.

(4) The municipality may enter into an agreement with the owner of a parcel of land shown on its tax arrears list providing for the payment of the tax arrears over a period not exceeding 3 years, and in that event the parcel need not be offered for sale under subsection (1) until

(a) the agreement has expired, or

(b) the owner of the parcel breaches the agreement,

whichever occurs first.

1994 cM-26.1 s418;1995 c24 s62;1996 c30 s35

Reserve bid and conditions of sale

419 The council must set

(a) for each parcel of land to be offered for sale at a public auction, a reserve bid that is as close as reasonably possible to the market value of the parcel, and

(b) any conditions that apply to the sale.

1994 cM-26.1 s419

Right to possession

420(1) From the date on which a parcel of land is offered for sale at a public auction, the municipality is entitled to possession of the parcel.

(2) For the purposes of obtaining possession of a parcel of land, a designated officer may enter the parcel and take possession of it for and in the name of the municipality and, if in so doing resistance is encountered, the municipality may apply to the Court of Queen's Bench for an order for the possession of the parcel.

RSA 2000 cM-26 s420;2009 c53 s119

Advertisement of public auction

421(1) The municipality must advertise the public auction

(a) in one issue of The Alberta Gazette, not less than 40 days and not more than 90 days before the date on which the public auction is to be held, and

(3.1) Subject to subsection (3.3), if the municipality is satisfied that there are no debts that are secured by an encumbrance on the certificate of title for the parcel of land, the municipality may pay the money remaining to the previous owner.

(3.2) If the municipality is not satisfied that there are no debts that are secured by an encumbrance on the certificate of title for the parcel of land, the municipality must notify the previous owner that an application may be made under section 428(1) to recover all or part of the money.

(3.3) For the purposes of this Division, "previous owner" includes the Crown in right of Alberta if the municipality has been notified by the Minister responsible for the *Unclaimed Personal Property and Vested Property Act* that the land has vested in the Crown, and any money remaining after payment of the tax arrears and costs set out in subsection (2) must be paid to the Minister responsible for the *Unclaimed Personal Property and Vested Property Act.*

(4) Money paid to a municipality under a lease, licence or permit granted under section 425(2) must be placed in the account referred to in subsection (1) and distributed in accordance with this section and section 428.

RSA 2000 cM-26 s427;2007 cU-1.5 s73

Distribution of surplus sale proceeds

428(1) A person may apply to the Court of Queen's Bench for an order declaring that the person is entitled to a part of the money in the account referred to in section 427(1).

(2) An application under this section must be made within 10 years after

(a) the date of the public auction, if the parcel was sold at a public auction, or

(b) the date of a sale under section 425, if the parcel was sold at a sale under that section.

(3) The Court must decide if notice must be given to any person other than the applicant and in that event the hearing must be adjourned to allow notice to be given.

(4) In making an order, the Court must have regard to the priorities in which sale proceeds are distributed in a foreclosure action.

RSA 2000 cM-26 s428;2009 c53 s119

Payment of undistributed money to municipality

428.1 If no application is made under section 428 within the 10-year period referred to in section 428(2), the municipality may,

REQUEST FOR DECISION

SUBJECT:	**Clay Shoot 2020**			
SUBMISSION TO:	REGULAR COUNCIL MEETING	REVIEWED AND APPROVED FOR SUBMISSION		
MEETING DATE:	June 22, 2020	CAO:	MANAGER:	SS
DEPARTMENT:	CAO SERVICES	GM:	PRESENTER:	WH
STRATEGIC PLAN:	Quality of Life			

RELEVANT LEGISLATION:
Provincial (cite) – N/A

Council Bylaw/Policy (cite) – N/A

RECOMMENDED ACTION:
MOTION: That Council proceeds with the 3rd Annual Sporting Clay Shoot on Thursday, September 10, 2020, with the focus being a stakeholder event, with funds to come from the 2020 Operating Budget.

MOTION: That Council set the registration fee for the 3rd Annual Sporting Clay shoot to $80.00 per person.

BACKGROUND/PROPOSAL:
Greenview historically hosted an annual public relations event in the form of a golf tournament from 2000 to 2017. In 2018 Greenview changed gears, hosting the 1st Annual Sporting Clay Shoot, which received positive reviews from all who participated. The friendly competition was a chance for Greenview Council and administration to have meaningful conversations and connect with industrial ratepayers and neighbours, focusing on raising funds for a local charity of Councils' choice.

The 2018 tournament raised approximately $20,000 for Lila's Angels and had 70 participants registered, while the 2019 tournament raised $36,000 for local food banks within Greenview, with 78 registrants. Both years have been successful in both the fundraising and the networking opportunities the event has provided.

With the COVID-19 pandemic and the current economic climate, administration is proposing to host the 3rd Annual 2020 Sporting Clay Shoot a little differently than in the past two years. Administration recommends a shift in the focus of the event from fundraising to networking and socializing, thereby giving our participants an enjoyable afternoon, with no expectations of additional funds to be spent.

For the past two years, Greenview provided a subsidized registration fee of $80 per participant or $40 for supper only. Actual registration costs were closer to $160.00 per participant. Council has the option to keep registration fees the same or set a new registration amount for 2020. (Exact numbers will be made available at the Council Meeting).

Registration fees for the 2020 shoot may be used to provide cost recovery for the event, or Council may choose to donate to a charity of their choice.

In keeping with current outdoor gathering restrictions, registrants will be capped at 80, including Staff and Council, and have no more than 20 extra individuals on-site with volunteers and range staff. Administration will closely monitor the rules and regulations laid out by the Province and work with Shot Shell staff to adhere to all guidelines. Administration remains cognizant that circumstances and restrictions may change between now and September, and are prepared to modify and adapt plans as needed.

Proposed Schedule: Registration 11:00 a.m.
Safety Meeting 11:30 a.m.
Lunch at 12:00 p.m.
Tournament 1:00 p.m. to 4:00 p.m.
BBQ 5:00 p.m.

BENEFITS OF THE RECOMMENDED ACTION:

1. The benefit of Council hosting the stakeholder event provides an opportunity for Greenview Council and Staff to network with stakeholders.

2. The benefit of Council keeping the reduced registration fee will show stakeholders and ratepayers that Greenview understands the difficult economic times they may be facing.

3. The benefit of Council hosting the event with reduced registration, may open the door for new participants who may not have participated otherwise.

DISADVANTAGES OF THE RECOMMENDED ACTION:

1. There are no perceived disadvantages to this motion.

ALTERNATIVES CONSIDERED:

Alternative #1: Council may choose to go ahead with the event in the same format as previous years, focusing on fundraising for a local charity. This is not recommended due to the hardships many businesses are currently facing.

Alternative #2: Council may choose to set a new registration fee amount.

Alternative #3: Council may choose to cancel the 3rd Annual Sport Clay Shoot for 2020.

FINANCIAL IMPLICATION:

Direct Costs:

Funding for this event is provided in the 2020 budget to a maximum amount of $20,000.

STAFFING IMPLICATION:

The Event Coordinator will organize a staff committee for logistics and additional volunteers will be required on the event day.

PUBLIC ENGAGEMENT LEVEL:
Greenview has adopted the IAP2 Framework for public consultation.

INCREASING LEVEL OF PUBLIC IMPACT
Inform

PUBLIC PARTICIPATION GOAL
Inform - To provide the public with balanced and objective information to assist them in understanding the problem, alternatives, opportunities and/or solutions.

PROMISE TO THE PUBLIC
Inform - We will keep you informed.

FOLLOW UP ACTIONS:
If Council approves the motion, tournament planning will officially begin. Invitations will be designed and sent out with RSVPs expected by end of August.

ATTACHMENT(S):

- 2020 Proposed Budget

Greenview Clay Shoot 2019					
Total Budget $20,000					
Expense	**Cost**	**Quantity**	**Total**	**2020 Propsed**	**Notes**
Registration Packages	24	80	$2,016.00	$2,100.00	2019 we provided MD hats at $24.00 each. Try to keep price point similar for 2020.
Supper Costs	7	100	$700.00	$1,000.00	Some food costs have increased, numbers reflect this.
Trapper Gord (prizes)			$837.08		
Prizes			$280.00	$1,000.00	Will budget our team and individual prizes to approx. $1000.00
Printing Costs of Signs		1	$1,946.20	$0.00	If Council proceeds with no fundraising we will not have the cost of providing sponsorship signs for 2020.
Sportswear Plus			$116.55		
Greenview Promo			$846.30	$600.00	Reduce budget for door prizes
Safety Supplies			$303.96	$150.00	Safety Glasses, Hearing Protection - Still have some from last year to utilize.
Shot Shell Enterprises Ltd.		78	$13,868.40	$13,175.00	80 Shooters @ $160.00 each, 20 lunch @ $25
Bill Duncan (Signage) Design			$630.00	$0.00	
Total			**$21,544**	**$18,025**	

Clay Shoot 2019 Revenue					
Source	**Cost**	**Quantity**	**Total**		**Notes**
Registration Fees	80	35	2800	**$6,400.00**	80 registrants at $80.00
Total			**$2,800.00**	**$6,400.00**	

Clay Shoot 2019 Fundraising - Sponsorships				
Source	**Cost**	**Quantity**	**Total**	**Notes**
Paramount Resources	5000	1	5000	Platinum Sponsor
Tiger Calcium	3000	1	3000	Platinum Sponsor
RMA	3000	1	3000	Platinum Sponsor

ATB	3000	1	3000	Platinum Sponsor
Aquatera	1500	1	1500	Silver Sponsor
WSP	1000	1	1000	Silver Sponsor
Seven Generations	1000	1	1000	Silver Sponsor
CST Coal	1000	1	1000	Silver Sponsor
Secure Energy	1000	1	1000	Silver Sponsor
Tourmaline	1000	1	1000	Silver Sponsor
Pembina	1000	1	1000	Silver Sponsor
County of GP	1000	1	1000	Silver Sponsor
Associated Energineering	1000	1	1000	Silver Sponsor
Grande Cache Fire Dept.	1000	1	1000	Silver Sponsor
Accurate Assessment Group Ltd	1000	1	1000	Silver Sponsor
McNeil Construction	1000	1	1000	Silver Sponsor
J.Moody Grader Services	1000	1	1000	Silver Sponsor
Town of Fox Creek	1000	1	1000	Silver Sponsor
MD of Smoky River	500	1	500	Bronze Sponsor
HiTech GP	500	1	500	Bronze Sponsor
Big Lakes County	500	1	500	Bronze Sponsor
Sameng	500	1	500	Stand Sponsor
Total			**$30,500.00**	

Clay Shoot 2019 Fundraising - Other				
Source	**Cost**	**Quantity**	**Total**	**Notes**
Prize Donations				Reynolds Mirth Richards & Farmer LLP donated Air Pods, Councillor Shawn Acton donated Woodworking, Armtec Canada Culvert donated Projeckt Bag, Nitehawk donated Family Day Pass Gift Gertificate, ATCO Electric donated a Gift Basket, Town of Valleyview donated a Smoker
Cash Donations				
Albert Lavergne	100	1	100	Cash Donation

Country Pump Out	500	1	500	Cash Donation
Rifle	2340	1	2340	Donations
Total			**$2,940.00**	

Grand Total **$36,240.00**

REQUEST FOR DECISION

SUBJECT:	**Policy 6320 Greenview Rental Equipment**				
SUBMISSION TO:	REGULAR COUNCIL MEETING	REVIEWED AND APPROVED FOR SUBMISSION			
MEETING DATE:	June 22, 2020	CAO:	DT	MANAGER:	
DEPARTMENT:	AGRICULTURE	GM:		PRESENTER:	DL
STRATEGIC PLAN:	Level of Service				

RELEVANT LEGISLATION:
Provincial (cite) –N/A

Council Bylaw/Policy (cite) –N/A

RECOMMENDED ACTION:
MOTION: That Council approve Policy 6320 Greenview Rental Equipment as presented.

BACKGROUND/PROPOSAL:
This policy will replace Policy AG 09. The changes to this policy are:

- Updated to current policy standards and numbering
- Addition of a non-refundable $20.00 deposit to rentals over $20.00 to dissuade users from no-showing without providing at least 24 hours notice of cancellation. These deposits will be applied to the overall cost of rental once the equipment has been picked up as scheduled.
- Updated language.

PRC recommended the following changes May 12, 2020:

- Valleyview, Fox Creek and Sturgeon Lake Cree Nation be added to Provision 2.
- The $20.00 deposit be changed to a 20% deposit in provision 4. This allows a deposit to be taken on all rental equipment, not just the pieces over $20.00.
- Clarify the pre-rental and post-rental inspection in provision 5.
- Identify that equipment must be returned to the yard that it was rented from to Provision 7.
- Administration also adjusted to the wording of Provision 12 for additional clarity.

Council recommended the following revisions at the May 25, 2020 Council meeting:

- Addition of Rental Steward to the policy in the place of administration and the manager of Ag Services to allow for greater applicability to satellite rental yard sites.
- The time be removed and state a pre-arranged time determined by the Rental Steward.

BENEFITS OF THE RECOMMENDED ACTION:

1. Greenview will have a deterrent to no show renters to ensure that equipment is available to residents.

DISADVANTAGES OF THE RECOMMENDED ACTION:

There are no perceived disadvantages to the recommended motion.

ALTERNATIVES CONSIDERED:

Alternative #1: Additional recommended changes may be made.

FINANCIAL IMPLICATION:

There are no financial implications to the recommended motion.

STAFFING IMPLICATION:

There are no staffing implications to the recommended motion.

PUBLIC ENGAGEMENT LEVEL:

Greenview has adopted the IAP2 Framework for public consultation.

INCREASING LEVEL OF PUBLIC IMPACT

Inform

PUBLIC PARTICIPATION GOAL

Inform - To provide the public with balanced and objective information to assist them in understanding the problem, alternatives, opportunities and/or solutions.

PROMISE TO THE PUBLIC

Inform - We will keep you informed.

FOLLOW UP ACTIONS:

There are no follow up actions to the recommended motion.

ATTACHMENT(S):

- AG 09
- Policy 6320

POLICY NUMBER: AG 09

POLICY TITLE: RENTAL OF M.D. EQUIPMENT	**Page 1 of 2**
Date Adopted by Council / Motion Number:	**12.06.357**

PURPOSE:

To give non-profit organizations and ratepayers access to specialized equipment being made available for rent by the M.D.

POLICY:

The M.D. of Greenview will rent equipment to non-profit organizations and ratepayers that are in good standing with the M.D., as per established guidelines.

1. Rental equipment will be utilized only in the M.D. of Greenview No. 16.

   a) Rental equipment will be released to a renter following the completion of a Rental Agreement form, which is attached hereto as part of this policy.

2. Rental fees plus applicable Goods and Service Tax will be collected for the number of days rented, upon the equipment's return. A minimum one days rent will be collected, whether the equipment was used or not.

3. Damage charges may be assessed after the equipment passes an inspection of working order and cleanliness. Damage obviously caused by the renter will be charged back to the renter.

4. Equipment returned unclean will be cleaned and a cleaning fee will be charged.

5. If the equipment is not returned on the day specified by the rental agreement, and other persons are waiting for the equipment, the renter will be contacted. If the lessee fails to return the equipment, the C.A.O. or designate will retrieve the equipment. This will result in the renter forfeiting rental privileges until such time as full recovery of costs, plus rental charges for the total number days that the equipment was held, are recovered.

6. The renter is responsible to ensure the equipment is transported safely and M.D. Staff has the right to refuse the release of any piece of equipment, if in their opinion it cannot be transported in a safe manner.

7. Rental fees are to be established by Council by resolution from time to time, and set forth in the Schedule of Fees for the Municipality.

8. The M.D. may provide transportation for delivery of the equipment with rates set forth in the Schedule of Fees.

9. The M.D. reserves the right to deliver and pick up the equipment, based on limitations due to operations.

10. Non-profit organizations will be allowed to rent/use equipment only for recognized community events.

(Original signed copy on file)
REEVE

C.A.O.

POLICY

Title: Greenview Rental Equipment

Policy No: 6320

Effective Date:

Motion Number:

Supersedes Policy No: AG 09

Review Date:

Purpose: To give non-profit organizations and ratepayers access to specialized equipment being made available for rent by Greenview.

Revised

DEFINITIONS

CAO means the Chief Administrative Officer.

Greenview means the Municipal District of Greenview No. 16.

Rental Steward means the individual who manages the rental equipment available at any of Greenview's rental yards.

POLICY

1. Greenview will rent equipment to non-profit organizations and ratepayers that are in good standing with Greenview, as per this policy.

2. Rental equipment will be utilized only in Greenview, including the Towns of Valleyview and Fox Creek, and Sturgeon Lake Cree Nation.
    a. Rental equipment will be released to a renter following the completion of a Greenview Rental Agreement form~~, which is attached hereto as part of this policy~~.

3. Rental fees plus applicable Goods and Service Tax will be collected for the number of days rented, upon the equipment's return. A minimum one days rent will be collected, whether the equipment was used or not.
    a. Rental fees are to be established by Council by resolution from time to time, and set forth in the Schedules of Fees.

4. A 20% deposit will be required at the time of booking ~~for equipment with a rental cost over $20.00 per day~~. If a renter fails to pick up the piece of equipment on the scheduled day, without providing 24 hours notice of a cancellation, the renter will forfeit the deposit. The deposit fee may be waived at the Rental Steward's discretion due to weather or other circumstances out of the renter's control, including unscheduled maintenance or repair of equipment.

5. Prior to releasing the piece of equipment from the rental yard, the Rental Steward or designate will perform a pre-rental inspection of working order, damages and cleanliness with the renter. Upon return of the piece of equipment, a post-rental inspection will be conducted by the Rental Steward or designate. Damage or alterations obviously caused by the renter upon return of the equipment will be charged back to the renter.

6. Equipment returned unclean will be cleaned and a cleaning fee will be charged in accordance with the Schedules of Fees.

7. Rental equipment must be returned to the rental yard that it was rented from, at the pre-arranged time determined by the Rental Steward. Extensions may be granted at the discretion of the Rental Steward. Rental equipment may be returned to a different rental yard at the discretion of the Rental Steward.

8. If the equipment is not returned on the day specified by the rental agreement, and other renters are waiting for the equipment, the renter will be contacted. If the renter fails to return the equipment, the CAO, or designate will retrieve the equipment. This will result in the renter forfeiting rental privileges until such time as full recovery of costs, plus rental charges for the total number days that the equipment was held, are recovered.

9. If the renter fails to pay rental fees or deposits, they will forfeit rental privileges until the balance of their account is paid.

10. The renter is responsible to ensure the equipment is transported safely and Greenview staff have the right to refuse the release of any piece of equipment, if in their opinion, it cannot be transported in a safe manner.

11. Greenview may provide transportation for delivery of the equipment with rates set forth in the Schedules of Fees.

12. Greenview has the option to deliver and/ or pick up the equipment, based on operational limitations.

13. Non-profit organizations will be allowed to rent/use equipment only for recognized local community events.

Revised

REQUEST FOR DECISION

SUBJECT:	**Canada Day Fireworks – Funding Request**				
SUBMISSION TO:	REGULAR COUNCIL MEETING	REVIEWED AND APPROVED FOR SUBMISSION			
MEETING DATE:	June 22, 2020	CAO:	DT	MANAGER:	
DEPARTMENT:	COMMUNITY SERVICES	GM:	GM	PRESENTER:	GM
STRATEGIC PLAN:	Level of Service				

RELEVANT LEGISLATION:
Provincial (cite) – N/A

Council Bylaw/Policy (cite) – N/A

RECOMMENDED ACTION:
MOTION: That Council approve a grant in the amount of $1,000.00 to the Town of Valleyview for the 2020 Canada Day fireworks display, with funds to come from the Community Service Miscellaneous Grants.

BACKGROUND/PROPOSAL:
The Town of Valleyview sent a request for a financial support for the 2020 Canada Day fireworks celebrating Canada's Birthday on July 1st.

For the past two years, Greenview has granted the Town of Valleyview $1,000.00 for this event.

Community Services Miscellaneous Grant has a balance of $627,385.18 as of June 21, 2020.

BENEFITS OF THE RECOMMENDED ACTION:
1. The benefit of Council accepting the recommended motion is that the Valleyview Canada Day fireworks may proceed in a similar capacity as displayed to the community in the previous years.

DISADVANTAGES OF THE RECOMMENDED ACTION:
1. There are no perceived disadvantages to the recommended motion.

ALTERNATIVES CONSIDERED:
Alternative #1: Council has the alternative to deny the request from the Town of Valleyview or provide an alternate level of financial support for this event.

FINANCIAL IMPLICATION:
Direct Costs: $1,000.00

STAFFING IMPLICATION:

There are no staffing implications to the recommended motion.

PUBLIC ENGAGEMENT LEVEL:

Greenview has adopted the IAP2 Framework for public consultation.

INCREASING LEVEL OF PUBLIC IMPACT

Inform

PUBLIC PARTICIPATION GOAL

Inform - To provide the public with balanced and objective information to assist them in understanding the problem, alternatives, opportunities and/or solutions.

PROMISE TO THE PUBLIC

Inform - We will keep you informed.

FOLLOW UP ACTIONS:

Administration will inform the Town of Valleyview regarding their funding request for the fireworks accordingly with Council's decision.

ATTACHMENT(S):

- Email request from the CAO of the Town of Valleyview

Lianne Kruger

To: Denise Thompson
Subject: RE: 2020 Canada Day Fireworks

From: Ben Berlinguette [mailto:bBerlinguette@valleyview.ca]
Sent: June 10, 2020 3:02 PM
To: Denise Thompson <Denise.Thompson@MDGreenview.ab.ca>
Subject: 2020 Canada Day Fireworks

Good afternoon Denise,

Based on the Stage 2 relaunch, is the MD of Greenview open / receptive to donating funds for the 2020 Canada Day fireworks event?

Ben Berlinguette C.E.T
Chief Administrative Officer
Town of Valleyview
T 780-524-5150
C 780-552-3728
F 780-524-2727
bberlinguette@valleyview.ca

REQUEST FOR DECISION

SUBJECT:	**Grande Cache Institute Pedestrian Path**		
SUBMISSION TO:	REGULAR COUNCIL MEETING	REVIEWED AND APPROVED FOR SUBMISSION	
MEETING DATE:	June 22, 2020	CAO: DT	MANAGER:
DEPARTMENT:	CAO SERVICES	GM:	PRESENTER:
STRATEGIC PLAN:	Level of Service		

RELEVANT LEGISLATION:
Provincial (cite) – N/A

Council Bylaw/Policy (cite) – N/A

RECOMMENDED ACTION:
MOTION: That Council direct Administration to respond to Her Majesty the Queen in Right of Canada (as represented by Prairies Regional Deputy Commissioner, Correctional Service Canada) indicating Greenview's willingness to enter into a draft agreement on the Grande Cache Institute Pedestrian Path subject to an additional review conducted by Greenview.

BACKGROUND/PROPOSAL:
Councillor Duane Didow has directed Administration to bring the following motion forward;

"The MD of Greenview enter into a Draft agreement with the Government of Canada (draft template attached and does not need a signature at this time). To allow both parties to conduct additional review, but provide assurance that negotiations are underway."

Representatives from the Grande Cache Correctional Institution have included the following information in their proposed agreement:

"Community engagement and support are important components of CSC's mandate to rehabilitate offenders. Grande Cache Institution (GCI) is located less than 2 kilometers from the town of Grande Cache. Currently, there is no sidewalk/path for visitors or staff to travel between the town site and the institution, resulting in people having to walk or cycle on a narrow & busy road (Hoppe Avenue). Many visitors and GCI staff choose to walk or cycle the route; however, the busy road does not make it suitable to walk to the institution from the town and vice versa. This is a safety concern for pedestrians and cyclists, especially in the winter months when road conditions are icy, and the lanes become narrower. Constructing a pathway to GCI from the town will encourage offender visitors to attend the site more often, increase environmentally sustainable commuting, increase community morale and allowing CSC to further their mission by encouraging & assisting offenders to become law abiding citizens.

It is CSC's responsibility to understand and manage risk for its employees and visitors to our facilities and in turn assess, identify, develop, and implement ways to maintain safe and secure operations. The construction

of a sidewalk/pathway from the town of Grande Cache to GCI benefits to both the Municipal District of Greenview and the Institution by contributing to safety and to a healthier workforce at the site, which in turn provides a significant positive influence on the safety & security of GCI.

The construction of a sidewalk/pathway from the community of Grande Cache contributes to a Productive relationship with the Hamlet of Grande Cache & The Municipality, by significantly improving the safety of pedestrians and cyclists travelling to and from GCI.

1.1 Project Summary -The Project will construct a paved walking/cycling path, approximately 1.7km in length, between the Town of Grande Cache and CSC's Grande Cache Institution."

Administration recognizes the potential merit of this project to ratepayers and as such has been attempting to flesh out the details for Councils consideration since late 2019 when first approached. At this time Administration inquired from Correctional Service Canada (CSC) what was needed to prepare and were informed to wait.

In May of 2020 CSC staff once again inquired about Greenviews interest in the project. Administration made three attempts to acquire information from CSC to prepare information for Councils consideration. On two attempts messages were left with no response and the third attempt resulted in CSC staff indicating that they were busy and would be in touch which did not occur until a string of emails in June.

From late 2019 to spring 2020 the General Manager of Infrastructure and Planning has been scheduling infrastructure projects in accordance with budget deliberations, anticipated available construction days and available staff resources. As a result the following has been considered in regards to this project.

- This project was not outlined in the 2020 project schedule as a result of the aforementioned process and has come forward with very strict timelines.
- This project would need to be tendered if it is to be completed in the construction season which may pose difficulties considering the timelines involved.
- Administration has not had enough time to survey the pathway, or compile any pre-construction data to pass on to Council.
- A sidewalk from the edge of Phase 5/6 down to the Institution has not been considered by Administration prior to this enquiry.
- There is no funding allocated in the 2020 Budget for this project.
- Administration does not have a tally of costs that would be incurred by Greenview for this project. No estimates have been provided or yet sought by Greenview.
- When considering the anticipated approved construction schedule, staff resources are limited for additional projects.

BENEFITS OF THE RECOMMENDED ACTION:

1. Greenview would receive partial funding for this project as opposed to have to incur the entire costs if this project was to be completed later.

2. Increased pedestrian safety.

DISADVANTAGES OF THE RECOMMENDED ACTION:

1. Greenview would be adding a project to the 2020 Capital Plan that is not budgeted.

ALTERNATIVES CONSIDERED:

Alternative #1: Council may chose not to enter into this agreement and not proceed with this joint project.

FINANCIAL IMPLICATION:

Direct Costs: Unknown

Ongoing / Future Costs: Snow clearing in the winter months and ongoing repair and maintenance. Minimal overall costs.

STAFFING IMPLICATION:

Minimal – snow clearing and annual maintenance.

PUBLIC ENGAGEMENT LEVEL:

Greenview has adopted the IAP2 Framework for public consultation.

INCREASING LEVEL OF PUBLIC IMPACT

Collaborate

PUBLIC PARTICIPATION GOAL

Collaborate - To partner with the public in each aspect of the decision including the development of alternatives and the identification of the preferred solutions.

PROMISE TO THE PUBLIC

Consult - We will keep you informed, listen to and acknowledge concerns and aspirations, and provide feedback on how public input influenced the decision

---

FOLLOW UP ACTIONS:

ATTACHMENT(S):

- Draft Agreement provided to Administration
- Map

2020-2022 Contribution Agreement

This Contribution Agreement ("Agreement") is made in triplicate.

BETWEEN: Her Majesty the Queen in Right of Canada (as represented by Prairies Regional Deputy Commissioner, Correctional Service Canada) (hereinafter referred to as "CSC")

OF THE FIRST PART

AND: Alberta Municipal District of Greenview No. 16, as represented by Denise Thompson Chief Administrative Officer (hereinafter referred to as "The Municipality")

OF THE SECOND PART

WHEREAS the Treasury Board approved the Terms and Conditions of CSC's National Infrastructure Contribution Program (hereinafter referred to as NICP) authorizing CSC to enter into agreements to provide contributions to qualified provinces, territories, municipalities, and non-profit organizations.

NOW THEREFORE, this Agreement witnesseth as follows:

1. **TITLE**: "**Grande Cache Sidewalk / Path**" (hereinafter referred to as the Project)

2. **THE PROJECT:**

2.1 Background

Community engagement and support are important components of CSC's mandate to rehabilitate offenders. Grande Cache Institution (GCI) is located less than 2 kilometers from the town of Grande Cache. Currently, there is no sidewalk/path for visitors or staff to travel between the town site and the institution, resulting in people having to walk or cycle on a narrow & busy road (Hoppe Avenue). Many visitors and GCI staff choose to walk or cycle the route; however, the busy road does not make it suitable to walk to the institution from the town and vice versa. This is a safety concern for pedestrians and cyclists, especially in the winter months when road conditions are icy, and the lanes become narrower. Constructing a pathway to GCI from the town will encourage offender visitors to attend the site more often, increase environmentally sustainable commuting, increase community morale and allowing CSC to further their mission by encouraging & assisting offenders to become law abiding citizens.

It is CSC's responsibility to understand and manage risk for its employees and visitors to our facilities and in turn assess, identify, develop, and implement ways to maintain safe and secure operations. The construction of a sidewalk/pathway from the town of Grande Cache to GCI benefits to both the Municipal District of Greenview and the Institution by contributing to safety and to a healthier workforce at the site, which in turn provides a significant positive influence on the safety & security of GCI.

The construction of a sidewalk/pathway from the community of Grande Cache contributes to a Productive relationship with the Hamlet of Grande Cache & The Municipality, by significantly improving the safety of pedestrians and cyclists travelling to and from GCI.

2.2 Project Summary

The Project will construct a paved walking/cycling path, approximately 1.7km in length, between the Town of Grande Cache and CSC's Grande Cache Institution.

3. RESPONSIBILITIES OF THE RECIPIENT

The Recipient agrees to:

3.1 Use monies contributed by CSC in support of the Project, and the Recipient further agrees that in no case will CSC be liable for funding in excess of the amounts stated in this Agreement.

3.2 Upon reasonable notice by CSC, to provide CSC with access to the Recipient's staff, records and premises for purposes related to monitoring, reviewing or auditing the activities undertaken in relation to this Agreement, and related to the evaluation of the effectiveness or efficiency of the Project. CSC reserves the right to audit or cause to have audited the accounts and records of the Recipient to ensure compliance with the terms and conditions of this Agreement. The scope, coverage and timing of such audit shall be as determined by CSC and may be carried out by employees or agents of CSC.

3.3 Unless otherwise directed by CSC, the Recipient shall acknowledge the contribution received from CSC in any published paper, report, promotional activity, public presentation and electronic material related to the Project in the following manner:

3.3.1 "The **Grande Cache Sidewalk / Path** project has been made possible through a financial contribution from the Correctional Service of Canada".

4. CONTRIBUTION BY CSC:

4.1 Subject to this Agreement and in accordance with the Treasury Board Policy on Transfer Payments, CSC agrees to make contribution payments to the Recipient for an amount not to exceed Five Hundred & Sixty Thousand dollars ($560,000) $60,000 assessment/design + $500,000 construction, to carry out the Project between **June 15, 2020**, and **March 31, 2022**.

If reimbursements are made on claims by the Recipient

4.2 Payments under this Agreement will be made upon receipt and verification of invoices submitted by the Recipient clearly showing payment made to various contractors and consultants. Inspections will be made by CSC project leaders to verify that the work is completed. The final payment will be made when CSC deems the project completed.

5. FUNDING:

5.1 In accordance with Section 40 of *the Financial Administration Act (*R.S.C. 1985, C.F. – 11), payment of a contribution in any fiscal year (01 April – 31 March) is subject to there being an appropriation by the Parliament of Canada for the fiscal year which any commitment would come due for payment.

6. FUNDING CHANGES:

6.1 CSC may reduce or terminate funding under this Agreement in response to the Government's annual Budget, a parliamentary or governmental spending restraint decision, or a re-structuring or re-ordering of the federal mandate and responsibilities that impacts on the Project under which this Agreement is made.

6.2 If the funding for a Project is reduced as a result of a decision or occurrence mentioned in 6.1, the amount remaining unpaid under this Agreement may be reduced, as of the date the reduction takes effect, by a percentage equal to the percentage of the reduction.

6.3 If a Project or its funding is terminated as a result of a decision mentioned in 6.1, funding under this Agreement will be terminated as of the date the funding termination comes into effect.

6.4 If a Project is demonstrating, through its quarterly updated cash flow requirements, that it will not be able to spend all of its approved funding, CSC shall have the right to adjust the funding amount accordingly.

6.5 In the event of a funding reduction or termination, CSC shall give notice in writing to the Recipient of the relevant decision and its impact on the Agreement, as early as possible. Unless the decision or occurrence, causing the reduction or termination indicates a specific date for such action (less than 60 calendar days), CSC shall give notice to the Recipient sixty (60) calendar days before the action to reduce or terminate funding becomes effective.

6.6 In the case of a decision to reduce funding, CSC shall, in the notice in 6.4, offer to the Recipient a reasonable opportunity to work with the Department to negotiate a modification to the Recipient's obligation under this Agreement in light of this reduction. Where appropriate and subject to Section 6.2 above, CSC shall offer to the Recipient a reasonable opportunity to negotiate a way to implement the reduction with respect to any remaining payments.

7. SURPLUS AND OVERPAYMENTS

7.1 The Recipient shall refund to the Receiver General of Canada via CSC, 30 days after the submission of the final Report, any overpayment, payment made for expenses which are not eligible under this Agreement, unexpended or unaccounted balances. The Recipient acknowledges that such are debts to the Crown. Interest shall be charged on overdue repayments in accordance with the *Interest and Administrative Charges Regulations*.

7.2 The Recipient shall, for the purposes outlined in the Project and for the duration of this Agreement, declare to CSC any and all accrual or anticipated sources of funding from any level of government or private sources, in addition to the funding received under this Agreement.

8. REFUND:

8.1 The Recipient shall repay to CSC any and all disallowed expenditures and overpayments made under this Agreement. In the event that any such excess arising from this Agreement is not promptly refunded, CSC may deduct the identified amount from any further amounts due to the Recipient.

8.2 The Recipient shall refund to CSC:

8.2.1 within thirty (30) calendar days of the termination or expiry of this Agreement, any funds remitted to the Recipient and not spent prior to the termination or expiry of this Agreement;

8.2.2 immediately upon a written request by CSC, any funds remitted to the Recipient for which, in the opinion of CSC, no satisfactory evidence has been provided by the Recipients that the money has been spent in accordance with this Agreement;

8.2.3 immediately upon request, amounts paid in error; and

8.2.4 immediately upon request, the equivalent amount of funds received by the Recipient from other sources to cover expenditures for which the Recipient received under this Agreement.

8.3 CSC may withhold from any payment due under this Contribution Agreement or any subsequent agreement between CSC and the Recipient:

8.3.1 any funds that the Recipient is required to refund to the Receiver General for Canada pursuant to subsection 8.1 and 8.2; and

8.3.2 any funds to be received by the Recipient under the terms of a previous Agreement between CSC and the Recipient that had not been spent when the previous Agreement ended or was terminated, and that had not been refunded to CSC, or for which, in the opinion of CSC, no satisfactory evidence has been provided by the Recipient that the money has been spent in accordance with that Agreement.

9. BUDGET AND FINANCIAL REPORTS:

9.1 The Recipient shall submit, for CSC's approval, an updated cash flow report showing actual expenditures and adjusted budget, forecasts for subsequent reporting periods within that fiscal year, or for later fiscal years. These reports are due each quarter of the fiscal year of this Agreement.

9.2 The Recipient shall, within 30 calendar days of the termination or expiry of this Agreement, submit to CSC a final financial statement/invoice, and an electronic copy of the final report (including the evaluation report, if applicable).

9.3 CSC shall not be obliged to pay any bills or other costs submitted more than 30 calendar days after the termination or expiry of this Agreement.

10. RECORDS AND AUDIT:

10.1 The Recipient shall:

10.1.1 keep accounts and records of all financial transactions in accordance with generally accepted accounting principles;

10.1.2 keep all records intact for six (6) years after the termination or expiry of this Contribution Agreement, unless otherwise notified in writing by CSC that such records are no longer needed; and

10.1.3 immediately reimburse the Receiver General for Canada any overpayments or disallowed expenditures, as determined by the audit.

11. DURATION:

11.1 This Agreement will commence **June 15, 2020**, and will end on **March 31, 2022**, unless terminated earlier pursuant to the provisions of this Agreement.

12. INDEMNIFICATION AND LIABILITY:

12.1 The Recipient shall indemnify and save harmless CSC from and against all claims, losses, damages, costs, expenses, actions and other proceedings, made, sustained, brought, prosecuted, threatened to be brought or prosecuted, in any manner based upon, occasioned by or attributable to any injury to or death of a person or damage to or loss of property arising from any willful or negligent act, omission or delay on the part of the Recipient, the Recipient's servants or agents in performing the Project or as a result of the Project.

12.1.1 CSC shall not be held liable for any injury, including death, or for any loss or damage to property of the Recipient or for any obligation of the Recipient or anyone else, incurred or suffered by the Recipient or its agents, employees, contractors or voluntary workers in carrying out the Project, including where the Recipient has entered into loans, capital leases, or other long term obligations in relation with this Agreement.

12.1.2 The Recipient agrees not to represent itself as an agent or a partner of CSC at any time or in any situation.

12.1.3 The Recipient agrees to be solely responsible for any and all deductions and payments required to be made from or to employees and anyone else, including those for the Canada or Quebec Pension Plans, Employment Insurance, the Worker's Compensation Board, and the Canada Customs and Revenue Agency (Income Tax).

13. RECIPIENT'S STATUS:

13.1 This is an agreement for the purposes of contributing to a Project, neither Recipient nor any of Recipient's personnel is engaged by this agreement as an employee, servant or agent of CSC.

14. TERMINATION:

14.1 It is understood and agreed that either party shall have the right to terminate this Agreement upon giving the other party thirty (30) (90 if term is more than a year) days written notice.

14.2 It is understood and agreed that CSC may terminate this Agreement forthwith in the event of default of any provisions of the agreement by the Recipient.

15. AMENDMENT OR TEMINATION OF THE AGREEMENT:

15.1 This Agreement shall only be amended or terminated in writing, by mutual consent of CSC and the Recipient.

16. GENERAL:

16.1 No member of the Senate or the House of Commons shall be admitted to any share or part of the agreement, or to any benefit arising from it, that is not otherwise available to the general public.

16.2 No current or former public servant or public office holder to whom the Conflict of Interest Act, the Conflict of Interest and Post-Employment Code for Public Office Holders or the Values and Ethics Code for the Public Service applies shall derive direct benefit from the funding agreement unless the provision or receipt of such benefits is in compliance with such legislation and codes.

16.3 It is declared by the Recipient that the Recipient and any person lobbying on behalf of the Recipient to obtain funding are in compliance with the *Lobbying Act*.

16.4 The Recipient declares that it is committed to the promotion of and respect for a law abiding society, the rule of law and the values and principles underlying the *Canadian Charter of Rights and Freedoms* and the *Canadian Bill of Rights* and declares that it is not participating in, or condoning, any

activity that could be construed as contrary to the laws of Canada or its provinces or territories.

16.5 Any and all disputes under this Agreement shall be resolved between the Parties to this Agreement or their designates and shall not be referred to a third party for resolution.

17. CONFIDENTIALITY:

17.1 CSC and the Recipient shall both protect any confidential information according to applicable federal, provincial or territorial legislation and such information shall not be disclosed without the written consent of the individual to whom the information relates, unless as required by law.

17.2 Notwithstanding anything to the contrary in this Agreement, it is agreed by the Recipient that their name, the amount awarded and the general nature of the activities supported may be made publicly available by the Government of Canada.

18. OFFICIAL LANGUAGES:

18.1 It is understood that the Recipient will ensure they respect the spirit and intent of the *Official Languages* Act where significant demand warrants by:

18.1.1 making any announcements to the public concerning the Project in both official languages;

18.1.2 actively offering services to the public in both official languages;

18.1.3 making available in both official languages any documents for the general public relating to the Project; and

18.1.4 encouraging members of both official language communities to participate in the Project.

19. ENTIRE AGREEMENT:

19.1 This Agreement sets forth the entire Agreement and understanding between CSC and the Recipient and supersedes and cancels all previous negotiations, Agreements, applications, commitments, and writings with respect to the Project.

20. OBLIGATIONS SURVIVING TERMINATION:

20.1 All obligations of the Recipient shall expressly, or by their nature, survive termination or expiry of this Agreement until, and unless, they are fulfilled, or by their nature expire.

IN WITNESS WHEREOF the parties hereto have executed this Agreement the day of

_____
(date)

_____	_____
(witness)	(Recipient)

(witness)	Regional Deputy Commissioner- CSC

MUNICIPAL DISTRICT OF GREENVIEW NO. 16

COUNCIL MEMBERS BUSINESS REPORT

Ward 2 Councillor Dale Gervais		
DATE	BOARD/COMMITTEE	RELEVENT INFORMATION
6/8/2020	Regular Council Meeting	
6/15/2020	Committee of the Whole	

MUNICIPAL DISTRICT OF GREENVIEW NO. 16

COUNCIL MEMBERS BUSINESS REPORT

Ward 4 Councillor Shawn Acton		
DATE	BOARD/COMMITTEE	RELEVENT INFORMATION
06/08/2020	Regular Council Meeting	
06/09/2020	Municipal Planning Commission	
06/15/2020	Committee of the Whole	
06/16/2020	Fox Creek Library Board	
06/17/2020	Valleyview & District Medical Clinic	

Municipal District of Greenview No. 16

NAME: Shawn Acton

ADDRESS :

Employee # :

Department: Council

DATE	DEPART TIME	ARRIVE TIME	MEETING CODE	DESCRIPTION	KM		MEALS				LODGING EXPENSES	PER DIEM
							B	L	D	AMOUNT		
25-May				Council	94							
28-May				GRWMC	94							
NOTES:				KILOMETER CLAIM			TOTAL					
				RATE	KM's	TOTAL	LESS GST					
				$0.59 per km	188	110.92	NET CLAIM					
				$0.15 per km	188	28.20						
				SUBTOTAL		139.12					TOTAL CLAIM	139.12
Meeting Code : M for Meetings				LESS G.S.T.							LESS ADVANCES	
C for Conferences				TOTAL		139.12					AMOUNT DUE (OWING)	$139.12

Claimant

Date

Approved

Date

COUNCIL MEMBERS BUSINESS REPORT

Ward 6 Councillor Tom Burton		
DATE	BOARD/COMMITTEE	RELEVENT INFORMATION
6/9/2020	Municipal Planning Commission	4 Sub Divisions Applications
6/12/2020	CPAA Executive Meeting	Had discussions on: - An amended budget do to no conference being held. - Process for an AGM & Elections, possibly on October 16, 2020 @ 2:00 P.M. - Possibility of doing a Strategic Planning Session with the directors to review Bylaws, Policies and Sub – Committee work for the next year
6/13/2020	MD of Greenview Library Board	Had discussions on: - The Letter of Understanding between Grande Yellowhead Public School Division and the MD of Greenview Library Board on the funding of extended library hours for the Grande Cache Library for school usage. - The letter received from MD of Greenview on discontinuing the service of payroll/benefit provider. - Reviewed each Library Manager's reports and the process going forward for re-opening each library. DeBolt is re-opening on Monday, June 15 and Grande Cache is looking at the end of June sometime. - Received the resignation notification from a board member. - The distribution of minutes to applicable organizations.
6/15/2020	Committee of the Whole	Nitehawk Year-Round Adventure Park update/application for grant funding. Terrapin Geothermal update for a geothermal development in the MD. Discussed a policy for Ag Rental Equipment

6/15/2020	East Smoky Recreation Board	Discussed what programs could be offered this summer with the restrictions that are in place, do to the COVID-19 pandemic. Reviewed applications for funding for the local non-for-profit groups.

Municipal District of Greenview No. 16

NAME: Tom Burton

ADDRESS :

Employee # :

Department: Council

DATE	DEPART TIME	ARRIVE TIME	MEETING CODE	DESCRIPTION	KM		MEALS B	MEALS L	MEALS D	MEALS AMOUNT	LODGING EXPENSES	PER DIEM
June 1 2020			M	Municipal Affairs Town Hall Call Libraries Re-Opening								
June 8 2020			M	Council	120							
NOTES:				KILOMETER CLAIM					TOTAL			
				RATE	KM's	TOTAL			LESS GST			
				$0.59 per km	120	70.80			NET CLAIM			
				$0.15 per km	120	18.00						
				SUBTOTAL		88.80					TOTAL CLAIM	88.80
Meeting Code : M for Meetings				LESS G.S.T.							LESS ADVANCES	
C for Conferences				TOTAL		88.8					AMOUNT DUE (OWING)	$88.80

_____ Claimant

_____ Date

_____ Approved

_____ Date

MUNICIPAL DISTRICT OF GREENVIEW NO. 16

COUNCIL MEMBERS BUSINESS REPORT

Ward 7 Councillor Roxie Rutt		
DATE	BOARD/COMMITTEE	RELEVENT INFORMATION
6/9/2020	Regular Council Meeting	
6/9/2020	Municipal Planning Commission	
6/9/2020	Grande Prairie Public Library Board	
6/15/2020	Committee of the Whole	
6/17/2020	FCSS	
6/17/2020	Valleyview & District Medical Clinic	

Municipal District of Greenview No. 16

NAME: Roxie Rutt

ADDRESS :

Employee # :

Department: Council

DATE	DEPART TIME	ARRIVE TIME	MEETING CODE	DESCRIPTION	KM		MEALS B	MEALS L	MEALS D	MEALS AMOUNT	LODGING EXPENSES	PER DIEM
28-May			M	PACE Zoom meeting								
08-Jun			M	Regular Council Meeting	90							
22-May			M	GSF * I did travel it was not zoom!	150	ror on last claim						
NOTES:				KILOMETER CLAIM			TOTAL					
				RATE	KM's	TOTAL	LESS GST					
				$0.59 per km	240	141.60	NET CLAIM					
				$0.15 per km	240	36.00						
				SUBTOTAL		177.60				TOTAL CLAIM		177.60
Meeting Code : M for Meetings				LESS G.S.T.						LESS ADVANCES		
C for Conferences				TOTAL		177.6				AMOUNT DUE (OWING)		$177.60

Claimant

Date

Approved

Date

COUNCIL MEMBERS BUSINESS REPORT

Division 9 Councillor Duane Didow		
DATE	BOARD/COMMITTEE	RELEVENT INFORMATION
6/4/2020	Community Futures West Yellowhead	Investment Review Committee - Zoom
6/8/2020	Regular Council Meeting	Highlights on website
6/11/2020	Community Futures West Yellowhead	Investment Review Committee update on RRRF(Regional Relief and Recovery Fund) - Zoom
6/12/2020	Other	FCSSAA – Policy Review Committee – Zoom meeting
6/15/2020	Committee of the Whole	Attended via Zoom
6/17/2020	FCSS	Green View FCSS office re-open June 15th. Teleconference
6/17/2020	Community Futures West Yellowhead	Regular Board meeting - Zoom

Municipal District of Greenview No. 16

NAME: Tyler Olsen

ADDRESS :

Employee # :

Department: Council

DATE	DEPART TIME	ARRIVE TIME	MEETING CODE	DESCRIPTION	KM		MEALS B	MEALS L	MEALS D	MEALS AMOUNT	LODGING EXPENSES	PER DIEM
26-May	17:00	19:00		Nitehawk								
27-May	12:00	13:30		Nitehawk - Landslide Conf call								
27-May	17:30	19:30		Grande Prairie Regional Tourism								
28-May	10:30	12:00		Community Futures West YellowHead								
07-Jun	17:00	20:00		Travel for Regular Council	350							
08-Jun	8:30			Regular Council	350		X			20.00		

NOTES:	KILOMETER CLAIM			TOTAL	20.00		
	RATE	KM's	TOTAL	LESS GST			
	$0.59 per km	700	413.00	NET CLAIM	20.00		
	$0.15 per km	700	105.00				
	SUBTOTAL		518.00			TOTAL CLAIM	538.00
Meeting Code : M for Meetings	LESS G.S.T.					LESS ADVANCES	
C for Conferences	TOTAL		518			AMOUNT DUE (OWING)	$538.00

Claimant

Date

Approved

Date